Report No. FAA-RD-80-114-II
FAA-CT-80-60-II

COPY 1
RD 80/114-II
OCLC: 12128636

VISUAL CONFIRMATION OF VOICE TAKEOFF CLEARANCE (VICON) OPERATIONAL EVALUATION: VOLUME II, OPERATIONS AND MAINTENANCE MANUAL

FEDERAL AVIATION ADMINISTRATION
MAY 9 1985
TECHNICAL CENTER LIBRARY
ATLANTIC CITY, N.J. 08405

John J. Maurer et al.

FEDERAL AVIATION ADMINISTRATION TECHNICAL CENTER
Atlantic City Airport, N.J. 08405

FINAL REPORT

FEBRUARY 1981

Document is available to the U.S. public through
the National Technical Information Service,
Springfield, Virginia 22161.

Prepared for

U. S. DEPARTMENT OF TRANSPORTATION
FEDERAL AVIATION ADMINISTRATION
Systems Research & Development Service
Washington, D. C. 20590

FAA TECHNICAL CENTER LIBRARY NJ
FAA-RD-80-114-II c1
United State/Visual confirmation of voic
00009056

NOTICE

This document is disseminated under the sponsorship of the Department of Transportation in the interest of information exchange. The United States Government assumes no liability for the contents or use thereof.

The United States Government does not endorse products or manufacturers. Trade or manufacturer's names appear herein solely because they are considered essential to the object of this report.

Technical Report Documentation Page

1. Report No.	2. Government Accession No.	3. Recipient's Catalog No.
FAA-RD-80-114-II		

4. Title and Subtitle	5. Report Date
VISUAL CONFIRMATION OF VOICE TAKEOFF CLEARANCE (VICON) OPERATIONAL EVALUATION: VOLUME II, OPERATIONS AND MAINTENANCE MANUAL	February 1981
	6. Performing Organization Code
7. Author(s) J. Maurer, B. Castle, A. K. Novakoff, R. Nelson, S. Roditi, and F. P. Zito	8. Performing Organization Report No. FAA-CT-80-60-II
9. Performing Organization Name and Address Federal Aviation Administration Technical Center Atlantic City Airport, New Jersey 08405	10. Work Unit No. (TRAIS) 11. Contract or Grant No. 143-152-400
12. Sponsoring Agency Name and Address U.S. Department of Transportation Federal Aviation Administration Systems Research and Development Service Washington, D.C. 20590	13. Type of Report and Period Covered Final September 1977 - March 1980 14. Sponsoring Agency Code

15. Supplementary Notes

This report was published without formal editing, and illustrations were reproduced directly from the VICON Operations and Maintenance Manual which was prepared during VICON system testing at Bradley International Airport, Windsor Locks, Connecticut.

16. Abstract

This document is Volume II of the Visual Confirmation of Voice Takeoff Clearance (VICON) Operational Evaluation. It contains working drawings and schematic diagrams, technical details, and maintenance and detailed operational procedures for the VICON system that was installed at Bradley International Airport, Windsor Locks, Connecticut. The drawings, instructions, and charts in this volume are reproduced exactly as they were used by the Bradley maintenance and air traffic control specialists; no effort was made to formalize or improve the appearance of this information. This volume, therefore, would be utilized if one is interested in considering future implementation or design modification of the VICON system. Seven appendices were added in order to consolidate under one cover the various operational, maintenance, and design details for the VICON system and its components.

Volume I of the VICON Operational Evaluation is the stand-alone document that contains the background; data collection and analysis; summary of the operational evaluation; results and conclusions. It is expected that Volume I will be the publication most frequently consulted.

17. Key Words	18. Distribution Statement
Bradley International Airport VICON Visual Confirmation Voice Takeoff Clearance	Document is available to the U.S. public through the National Technical Information Service, Springfield, Virginia 22161

19. Security Classif. (of this report)	20. Security Classif. (of this page)	21. No. of Pages	22. Price
Unclassified	Unclassified	258	

Form DOT F 1700.7 (8-72) Reproduction of completed page authorized

METRIC CONVERSION FACTORS

Approximate Conversions to Metric Measures

Symbol	When You Know	Multiply by	To Find	Symbol
		LENGTH		
in	inches	*2.5	centimeters	cm
ft	feet	30	centimeters	cm
yd	yards	0.9	meters	m
mi	miles	1.6	kilometers	km
		AREA		
in^2	square inches	6.5	square centimeters	cm^2
ft^2	square feet	0.09	square meters	m^2
yd^2	square yards	0.8	square meters	m^2
mi^2	square miles	2.6	square kilometers	km^2
	acres	0.4	hectares	ha
		MASS (weight)		
oz	ounces	28	grams	g
lb	pounds	0.45	kilograms	kg
	short tons (2000 lb)	0.9	tonnes	t
		VOLUME		
tsp	teaspoons	5	milliliters	ml
Tbsp	tablespoons	15	milliliters	ml
fl oz	fluid ounces	30	milliliters	ml
c	cups	0.24	liters	l
pt	pints	0.47	liters	l
qt	quarts	0.95	liters	l
gal	gallons	3.8	liters	l
ft^3	cubic feet	0.03	cubic meters	m^3
yd^3	cubic yards	0.76	cubic meters	m^3
		TEMPERATURE (exact)		
°F	Fahrenheit temperature	5/9 (after subtracting 32)	Celsius temperature	°C

*1 in = 2.54 (exactly). For other exact conversions and more detailed tables, see NBS Misc. Publ. 286, Units of Weights and Measures, Price $2.25, SD Catalog No. C13.10:286.

Approximate Conversions from Metric Measures

Symbol	When You Know	Multiply by	To Find	Symbol
		LENGTH		
mm	millimeters	0.04	inches	in
cm	centimeters	0.4	inches	in
m	meters	3.3	feet	ft
m	meters	1.1	yards	yd
km	kilometers	0.6	miles	mi
		AREA		
cm^2	square centimeters	0.16	square inches	in^2
m^2	square meters	1.2	square yards	yd^2
km^2	square kilometers	0.4	square miles	mi^2
ha	hectares (10,000 m^2)	2.5	acres	
		MASS (weight)		
g	grams	0.035	ounces	oz
kg	kilograms	2.2	pounds	lb
t	tonnes (1000 kg)	1.1	short tons	
		VOLUME		
ml	milliliters	0.03	fluid ounces	fl oz
l	liters	2.1	pints	pt
l	liters	1.06	quarts	qt
l	liters	0.26	gallons	gal
m^3	cubic meters	35	cubic feet	ft^3
m^3	cubic meters	1.3	cubic yards	yd^3
		TEMPERATURE (exact)		
°C	Celsius temperature	9/5 (then add 32)	Fahrenheit temperature	°F

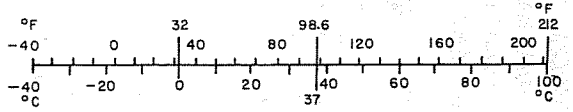

PREFACE

This report is a reprint of the operations and maintenance manual for the VICON system that was installed for evaluation at Bradley International Airport, Windsor Locks, Connecticut. It has been published without formal editing, and illustrations have been reproduced without benefit of redrafting.

The report consolidates the operational, maintenance, and design details for the VICON system and its components. It has been published to document information that would be of value in the event of future implementation or design modification of the VICON system.

TABLE OF CONTENTS

1.0 PURPOSE

2.0 OPERATING INSTRUCTIONS

2.1 Control/Display Panel
2.2 Control Panel Relay Cabinet
2.3 Hardwire Control System
2.4 Radio Control System
2.5 Radio Remote Control Terminal
2.6 Microwave Aircraft Detector
2.7 Photocell Intensity Control
2.8 Light Clusters
2.9 Cabling, Control, and Power
2.10 Data Acquisition System

3.0 THEORY OF OPERATION

3.1 Functional Analysis
3.1.1 Auxiliary Pilot Relay Panel
3.1.2 Timer Relay Panel
3.1.3 Power Relay Panel
3.1.4 Monitor Relay Panel
3.1.5 Power Distribution Cabinet
3.1.6 Pulser Assembly
3.2 Radio Operation
3.3 Data Acquisition System

4.0 SYSTEM SETUP AND MAINTENANCE PROCEDURES

4.1 Control/Display Panel and Control Panel Relay Cabinet
4.2 Auxiliary Pilot Relay Cabinet
4.3 Timer Relay Cabinet
4.4 Power Relay Cabinet
4.5 Power Distribution Cabinet
4.6 Monitor Relay Cabinet
4.7 Radio Control System
4.8 Microwave Aircraft Detector
4.9 Remote Power and Control Cabinet
4.10 Light Clusters
4.11 Control and Power Cabling
4.12 Data Acquisition System

5.0 TROUBLESHOOTING CHARTS

5.20 Schematics and Wiring Charts
XD-3000 Timer Relay Cabinet
XD-3004 Auxiliary Pilot Relay Cabinet

XD-3005 External Wiring Diagram
XD-3008 Power Distribution Cabinet
XD-3009 Radio Remote Power and Control Cabinet
XD-3010 Power Relay Cabinet
XD-3011 Monitor Relay Cabinet

6.0 PARTS LISTS

6.1 Auxiliary Pilot Relay Cabinet
6.2 Timer Relay Cabinet
6.3 Power Relay Cabinet
6.4 Power Distribution Cabinet
6.5 Monitor Relay Cabinet
6.6 Radio Control System
6.7 Microwave Aircraft Detector
6.8 Remote Power and Control Cabinet
6.9 Light Clusters

LIST OF ILLUSTRATIONS

FIGURE

1-1	Block Diagram of VICON System
1-2	VICON Field Installation (Drawing XC-1306)
1-3	Simplified Hardwire Schematic
1-4	Simplified Radio Control Schematic
1-5	Photograph of Hardwire Control System
1-6	Photograph of Radio Control System
1-7	Photograph of the Radio Control Terminal
1-8	Photograph of Microwave Aircraft Detector
1-9	Photograph of Photocell
1-10	Photograph of Light Cluster
1-11	Photograph of Data Acquisition System
3-1	Photograph of Auxiliary Relay Panel
3-2	Photograph of Timer Relay Panel
3-3	Photograph of Power Relay Panel
3-4	Photograph of Monitor Relay Panel
3-5	Photograph of Power Distribution Panel
3-6	Photograph of Pulser Assembly
3-7	Photograph of Data Acquisition System

APPENDICES

A Control Tower Cab Control Panel and Interface Equipment Operation and Maintenance Description

B Operational Instructions and Description for the VICON Control Panels

C Technical Manual for OMNI Spectra Model 300 500-Ft-Range Outdoor Microwave Link

D Director 3001 Programmable Controller Manual; Struthers-Dunn, Inc.

E Bradley Tower Self-Study Unit: Use of VICON Control Panels

F Operational Description and Instructions for the VICON Touch-Sensitive Control Panel

G Control Tower Cab Control Panel (Touch-Sensitive) and Interface Equipment Operation and Maintenance Description

VICON

OPERATIONS AND MAINTENANCE MANUAL

1.0 PURPOSE

As a pilot prepares for and is verbally cleared for takeoff, a cluster of green lights located on the left side of the runway takeoff positions is activated by the air traffic control specialist depressing the appropriate control button in the air traffic control tower. This VIsual CONfirmation (VICON) system thereby confirms that the aircraft has been verbally cleared for takeoff. Figure 1-1 shows a block diagram of the system as configured for Bradley International Airport (BDL), Windsor Locks, Connecticut. It consists of the following basic components which will be discussed in more detail later in this manual.

(1) Control/Display Panel
(2) Control Panel Relay Cabinet
(3) Hardwire Control System -
  (3a) Auxiliary Pilot Relay Cabinet
  (3b) Timer Relay Cabinet
  (3c) Power Relay Cabinet
  (3d) Power Distribution Cabinet
  (3e) Monitor Relay Cabinet
(4) Radio Control System
(5) Radio Remote Control Terminal
(6) Microwave Aircraft Detector
(7) Photocell Intensity Control
(8) Light Clusters
(9) Control and Power Cabling
(10) Data Acquisition System

As seen in Figure 1-1, the control/display panel is located in the control tower cab and it controls a set of relays in the control panel relay cabinet on the fourth floor equipment room in the control tower. The control/display panel also displays and monitors the real-time condition of the light clusters in the field (i.e., whether they are on or off). The control panel relay cabinet receives the information from the control/display panel in the cab and sends it on to the appropriate light cluster in the field by two possible routes.

The first route is by way of a system of control wires (hardwire system) to the old ASR-3 building, now called the VICON building, near the center of the airport just off taxiway "Charlie." There, all of the necessary hardwire control timers and relays are located and operated. From this point, only the necessary alternating current (a.c.) power is

transferred to each light cluster via buried cable. This hardwire system is designed to control all 21 of the light clusters. The second route is from the fourth floor equipment room to a radio control master station, direct by radio to remote radio stations and to the power and timer relay terminals located near each of four light clusters. The radio system is designed to control only the lights at the approach ends of runways 6, 24, 15, and 33.

All of the light clusters are turned on by the traffic controller and all are turned off by some automatic means. An exception is that the controller can always shut off all lights by depressing an "override" button. A simple adjustable timer (0 - 120 seconds) is one means of automatically shutting off the lights, and this is available to all 21 light clusters. A second turnoff method for the light clusters at the approach ends of runways 6, 24, 15, and 33 is by a microwave aircraft detector which turns off the lights when the microwave beam is broken by the passage of an aircraft. Under normal conditions, the four light clusters at the approach ends of runways 6, 24, 15 and 33 will be controlled by radio and the lights will be turned off by the microwave aircraft detector. The remaining 17 light clusters will be controlled by the hardwire system and the lights will be turned off by timers. The intensity of all of the light clusters will be controlled by a three position switch on the control/display panel in the tower cab. The three positions are high, low and automatic. The automatic position is controlled by photocells at the VICON building and at each approach end of runways 6, 24, 15, and 33, for a total of 5 photocells. Two intensities are available, high for daytime at 6.6 amperes, and low for nighttime at 5.5 amperes. The automatic position can be overridden by simply turning the control switch to HI or LO.

2.0 OPERATING INSTRUCTIONS

Operation of the VICON system is achieved by activating the controls on the control/display panel located in the cab of the control tower. This is covered in detail under operations manuals called out under paragraph 2, 1 and 2.2. Initial setup and operation of the rest of the system is minimal; as shown below. For a full understanding of the system it is necessary to refer to the following figures:

Figure 1-1 (VICON Block Diagram)
Figure 1-2 (VICON Field Installation) Drawing XC-1306
Figure 1-3 (Simplified Hardwire Schematic)
Figure 1-4 (Simplified Radio Control Schematic)

2.1 Control/Display Panel

2.2 Control Panel Relay Cabinet

For information on the above two items, refer to "Control Tower Cab Control Panel and Interface Equipment Operations and Maintenance Description," and "Operational Instructions and Description for the VICON Panels." (These items are enclosed as a part of the Operations and Maintenance Manual as Appendix 1 and 2.)

2.3 Hardwire Control System (Figure 1-5)

Generally this portion of the system requires no operating instructions except for the initial turn-on. This requires turning on the circuit breakers. numbers 11 and 14, in the circuit breaker panel just inside of the door of the VICON building and the circuit breakers at the end of the power distribution cabinet. The variacs in the power distribution cabinet must be adjusted so that each light cluster will draw approximately 6.6 amperes in the high intensity position and 5.5 amperes in the low position. The timers in the timer relay cabinet must be set to a value determined by the operations people. Unless told otherwise, set them all for 30 seconds.

2.4 Radio Control System (Figures 1-6 and 1-7)

This system provides the radio link between the control panel relay cabinet on the fourth floor of the control tower and the radio remote control terminals located at the approach ends of runways 15, 06, 24, and 33 (light clusters 18, 19, 20 and 21). It operates without any instructions after the proper inputs and 120 VAC are supplied to the cabinets. The inputs will be discussed in detail in the maintenance section of this manual.

2.5 Radio Remote Control Terminal (Figure 1-7)

This terminal consists of the remote portions of the radio system (see paragraph 2.4) and the complete remote power relay and control cabinets for lights clusters 18, 19, 20, and 21. The operation of these terminals is automatic once the input/output connections have been made. See maintenance section for proper connections.

2.6 Microwave Aircraft Detector (Figure 1-8)

The purpose of this detector is to automatically turn the VICON lights off whenever an aircraft passes between the two units of the system. Figure 1-8 shows a closeup of one unit. A transmitter is located on one side

of the runway and a receiver is located on the other side. Any disruption of the beam activates an output relay. The operation of this detector is automatic once the proper connections have been made. See the maintenance section for proper connections.

2.7 Photocell Intensity Control (Figure 1-9)

In the automatic position of the light intensity control, the light intensity of the light cluster is automatically controlled by this system (6.6 amperes for daytime operation and 5.5 amperes for nighttime operation). There are five photocells in the system at BDL. One controls the light intensity for all of the central area light clusters controlled from the VICON building (normally 17 light clusters). Each of the other four controls its own single light cluster at the runway approach ends (lights 18, 19, 20, and 21). These last four are in conjunction with the radio control of these lights. No operational tasks are required once the controls are properly installed and checked.

2.8 Light Clusters (Figure 1-10)

The light clusters operate by themselves once they are properly installed. See maintenance section for proper installations.

2.9 Control and Power Cabling

No operating instructions are required of these items.

2.10 Data Acquisition System (Figure 1-11)

This system consists of a Hewlett-Packard 396A four channel instrumentation tape recorder, a Systron Donner 8152 time code generator reader, a tone encode-decode network, two scanning receivers, an amplifier, and an automatic tape recorder control. The Hewlett-Packard magnetic tape recorder collects four channels of information:

Channel 1 - Time Code
Channel 2 - Tone Burst
Channel 3 - Ground Control
Channel 4 - Local Control

The Systron Donner time code generator reader provides a usable Standard IRIG-B Format of days, hours, minutes and seconds.

The Tone Burst network encodes 23 signals consisting of 21 "ON" signals (one for each light cluster), a monitor signal to acknowledge that a light did, in fact, come on and an override signal. An End of Tape alarm is also included for maintenance purposes.

The scanning radio receivers, as well as any control switches, trigger the automatic tape circuit that remotely starts the recording sequence. As soon as all activity stops for a period of 5 seconds or longer the tape is automatically shut off until further commands are received.

To operate the data acquisition system simply set all switches for proper recording as indicated in the maintenance section of this manual (paragraph 4).

3.0 THEORY OF OPERATION

This section describes the overall functional operation of the VICON power system located at BDL.

The functional analysis identifies and describes the subsystems or loops that perform specific operations. Diagrams show the interaction of the various components of each loop and the interaction between the loops. A detailed analysis of the relay panels that form each specific circuit and schematic diagrams for each is provided in section 4.

3.1 Functionsl Analysis

Seventeen light clusters are always controlled by the following panels and four are controlled by either this system or a radio system explained in paragraph 3.2. The hardwire portion of the VICON system consists of the following six basic subsystems.

1. Auxiliary Pilot Relay Panel
2. Timer Relay Panel
3. Power Relay Panel
4. Monitor Relay Panel
5. Power Distribution Cabinet
6. Pulser Assembly

As shown in Figure 1-1, commands to the VICON system are initiated by the controller using a control panel in the control tower cab. The inputs are then used to activate the pilot relays in the VICON building located in the center of the field.

3.1.1 Auxiliary Pilot Relay Panel (Figure 3-1)

This panel consists of 25 pilot relays for control of 21 light clusters, two intensity control relays, and two spares.

The pilot relays K1-A through K1-U are activated by the operator depressing a momentary "ON" switch in the control tower which applies a ground to the pilot relays and subsequently turns on the light clusters on the runways. The pilot relay is designed to self-latch with a ground provided through the timer panel. Thus, when the "ON" switch is released by the controller, the pilot relay stays closed. The pilot relay is responsible for activating the respective timer relays K5 and power relays K7, and these are also released when the pilot relays are released.

There are two methods of deactivating the pilot relays.

1. By depressing the override switch on the tower control panel.

2. By allowing the timer relay (K5) to complete its cycle. In each case the ground wire to the self-latching circuit of the pilot relay (K1) is momentarily released, causing it to deactivate. It then waits for another command.

The pilot relay panel also contains a "LO" intensity relay (K2) and an "automatic" intensity relay (K3). Each requires a steady ground for operation. Either one will cause the HI-LO intensity relays (K4), located in the power distribution panel, to switch to a low intensity. The "Auto" intensity relay (K3) obtains its control voltage through a photocell for automatic day-night operation. When neither low nor auto are activated, the HI-LO relays (K4) remain in their normally high intensity positions.

3.1.2 Timer Relay Panel (Figure 3-2)

These timers are used to automatically turn off each light cluster after a predetermined period of time. There are 21 timers, one for each light cluster, located on the timer relay panel plus four spare wired sockets.

When the pilot relay K1 is activated, a voltage is placed on the coil of the timer which initiates the internal timing circuit.

There is a predetermined variable delay on "operate" of approximately 30 seconds in this application. During this 30 second time interval nothing happens to the timer contacts but as soon as the cycle is completed the output contacts switch position. When this occurs, the ground to the pilot relay coil is interrupted causing the pilot relay to return to its normal position. The voltage to the coil of the timer is also disconnected causing the timer to reset. A ground via the timer is then again routed back to the contacts of the pilot relay but the pilot relay does not see this ground because it has also reset. It now waits for another command from the tower.

3.1.3 Power Relay Panel (Figure 3-3)

The power relay contacts allow the voltage from the autotransformer power distribution cabinet to be routed through the monitor relays out to the light clusters. These relays receive their activate voltage from the pilot relays as do the timer relays. As soon as the pilot relay is activated the timer and power relays also operate. Another set of contacts on the power relays also activate the pulser circuit (paragraph 3.1.6). When the timer completes its cycle the power relay is deactivated, disconnecting the power from the field.

3.1.4 Monitor Relay Panel (Figure 3-4)

These relays furnish a monitor signal to the control/display panel in the control tower. The coils of these relays are directly in series with the light cluster filaments so they can respond only when there is current flowing in the circuit. When the power relays and the pulser are activated, the monitor relay cycles with the pulser to produce a flashing green light on the control/display panel. The contacts of the monitor relay send a pulsating ground back to the tower. The control relay panel in the fourth floor equipment room of control tower interfaces the returned pulsing signal with the control/display panel and the data acquisition system.

3.1.5 Power Distribution Cabinet (Figure 3-5)

This panel consists of seven power autotransformers, seven fuses, seven HI-LO intensity relays and a circuit breaker box. Generally, each autotransformer provides voltage to three light clusters, except the sixth and seventh which feeds two and four respectively. Each of the seven autotransformers consist of two separate windings, one for high and one for low intensity. The winding selected depends upon the state of the HI-LO intensity relays (K4).

These autotranformers are adjusted to provide a constant current at the lamps at the field site (6.6 amperes for high intensity and 5.5 amperes for low intensity). Each autotransformer will have its individual discrete setting at the power distribution cabinet, depending upon the length of cable (and therefore voltage drop) to the lights. A convenient test voltmeter is provided in the distribution panel.

Power for both HI and LO taps from the autotransformers are fed to a HI-LO relay which then goes through a fuse, through the power relay, through the monitor relay and out to the lights. Each autotransformer has its own input circuit breaker and therefore, its own electrical supply.

3.1.6 Pulser Assembly (Figure 3-6)

The purpose of the pulser is to pulse the circuit on and off, thus creating a flashing green light in the field. The pulser is set for 2 seconds on and ½ second off and is activated every time a power relay is activated. The pulser is located in the monitor panel, as shown in Figure 3-4. The pulser controls four heavy duty relays that handle the total return lines from the light clusters so that no one set of contacts will bear the brunt of the high current. When the power relay is activated, the power is applied through the monitor relays to the lights and back through the pulser. As the pulser opens and closes the return line, the lights flash. As soon as the timer completes its cycle or the override is pushed, the power relay is released which disconnects power to the field and to the pulser.

3.2 Radio Operation (Figure 1-6 and 1-7)

VICON also has radio control operation for four runway ends. There is one master station located in the fourth floor equipment room of the tower and four remote stations located at the approach threshold of runways 6, 15, 24, and 33. Each remote station contains the same basic circuitry as the hardwire VICON system with the following minor differences:

1. The remote radio system is controlled through VHF FM pulse code modulation.

2. Each remote can be reset by a timer, by the air traffic controller, or by a microwave aircraft detector.

3. A set of switches determines the use of the radio control system or the hardwire control system.

The radio employs a polling method of operation. The master station continuously interrogates the remotes as to their status; except when there is a command given to a specific remote. It then stops polling, goes directly to that remote, sends the command, obtains confirmation of receipt, then continues polling from that remote. For complete details of the RFL radio remote control system refer to the RFL manual.

At each remote terminal there is a radio logic and transceiver cabinet, and a power relay and control cabinet. The relay cabinet contains a complete set of components for control of one light cluster. As in the hardwire system there is an autotransformer, photocell, pilot relay, timer relay, power relay, pulser, HI-LO relay, and a monitor relay. For theory of operation, refer to section 3.

Each remote relay cabinet contains its own power switch, radio/hardwire switch and timer/microwave switch.

The switch for radio or hardwire allows the clusters to be controlled by radio or from the VICON building, completely bypassing the radio system. Two switches, the one mentioned above, and one on the control panel relay cabinet in the equipment room, of the fourth floor of the control tower must be activated to switch from radio to hardwire and vice versa. The switch for timer or microwave aircraft detector (MAD system) allows the use of either the timer (section 3.1.2) or the MAD system.

The MAD system is a device that performs the same function as the timer. A ground from the control tower is switched to the normally closed relay in the MAD system which then is routed to the pilot relay. When the beam is broken, the relay is opened causing the ground to the pilot relay to be interrupted. Thus the system is reset, as discussed in section 3.1.2. The MAD system has a transmitter and receiver located on either side of the runway close to their controlling light cluster. A microwave beam of very low intensity is sent from the transmitter to the receiver. As long as the receiver sees this beam, the relay remains closed. When an aircraft blocks the beam from the transmitter, the receiver relay opens, thus releasing the control circuit and shutting off the lights.

3.3 Data Acquisition System (Figure 3-7)

The purpose of the data acquisition system is to record all necessary data during the operational test, for later analysis. The local controller, ground controller, time, and tone burst are recorded on magnetic tape.

The system is fully automatic in the sense that it will activate on any voice transmission from either the ground or local controller, and from any of 23 buttons being depressed on the control panel. The recording will continue until all activity has ceased for a minimum of 5 seconds. It will then automatically shut itself off until receipt of the next command.

The tone encode network, remote tape control and decode network are all located in a card rack of the data acquisition system.

The tone encode network consists of modules A and B.

Module A is a bank of mini relays (Teledyne 732D) directly attached to the outputs of the control panel switches. Each relay closes when momentary ground is received from the control panel, thereby placing two voltages of module B, one for each distinctly separated that are then recorded on channel two of the Hewlett-Packard tape recorder. Figures 3-8 and 3-9 show the schematic and board layout.

Module B contains the phase lock loop circuitry for the tone encoding section. These SN566 phase lock loops are activated by the mini relays from module A. As a voltage is applied to a particular input of each chip, a tone is produced and added together through a buffer amplifier which is then recorded. There are 25 possible combinations of tones of which 23 are being used (21 for light clusters, one for override, and one for monitor). See figures 3-10 and 3-11 for schematic and board layout of module C.

Module C contains the phase lock loops that decode the tone burst from the tape recorder. Each tone burst contains two different frequencies so that the appropriate two 567 tone decode chips change their output state from High to Low. These two outputs are applied to module D. See figures 3-12 and 3-13 for schematic and board layout of module C.

Module D is the matrix decoder network made of nor gates. The outputs from module C are normally in a high state so that the inputs to the nor gates are continually high. As long as there is at least one input high to a nor gate its output remains low. Two low inputs are required to make the output of the nor gate go high; therefore, when a particular set of two tones are detected and decoded, the two phase lock loops go low, triggering one and only one nor gate. This particular gate then provides a high output which is sent to a runway and intersection display by the next two cards, E and F. See figures 3-14 and 3-15 for schematic and layout of module D.

Module E receives and rearranges the input signals from module D to display the runway on the display panel. As the signal enters module E it triggers a latch pulse to retain the incoming signal and hold it for display. The latch pulse (approximately 15 ms) is triggered on the rising edge of the incoming signal. During this 15 ms pulse, the latch gate is opened allowing the information to move through the network to the display. At the end of the 15 ms the gate is closed, preventing any further changes on the input from passing through. The information on the input lasts anywhere from 25 ms to 1 second, long enough so the correct information is sampled and held for display. To clear the display a latch pulse can be applied to open the gates with no information at the inputs resulting in a zero display on the runway readout. See figures 3-16 and 3-17 for diagrams of module E and figure 3-18 for the seven segment display pin out.

Module F is the intersection decode board. It receives the same signals as the runway board (module E), except that it provides outputs for the intersection display. As information is received, a one shot is triggered and a 40 ms pulse is generated at the same time the latch pulse from module E opens the gates and retains the information. At the end of 15 ms, the information is held and displayed. If the latch pulse does not end before the information ends, the result will be erroneous data on the display. The override signal is generated on module F and is responsible for triggering a tone burst oscillator and display light to signify that override has been activated. See figures 3-19 and 3-20.

Module G is the Monitor Decoder Board. This board provides a 3 second signal indicating that a light came on in the field. This happens only once per light activation to consdrve tape, and will indicate that a light came on, not which one. Which light came on can be determined from the runway and intersection decoding display. The monitor light is triggered on the falling edge of the monitor signal, triggering one shot. This one shot then triggers a non-retriggerable one shot on the rising edge of its output. As long as there is a pulsing signal of the duration of 2½ seconds on and ½ second off, there will be no more monitor signals from Board G. As soon as the monitor stops pulsing for more than 3 seconds, the monitor network is ready to give another output pulse as soon as the next command is received. See figures 3-21 and 3-22 for details of module G.

Module H is the audio amplifier and tape control. Here the outputs from the tape recorder's preamps are amplified and sent to the speaker on the VICON display.

Each of the four channels can be turned on or off for monitoring as desired. The "override" is also emplified if the operator wishes to listen for it.

The radio speaker outputs are connected to the input of a voltage comparator circuit for automatic control. When the input to the comparator reaches a predetermined reference voltage the comparator pulses a retriggerable one shot that has a pulse duration of a minimum of 5 seconds, longer if the voice input to the comparactor continues to reach the threshold; as shown in figure 3-23. The Q and $\overline{Q}$ outputs of the retriggerable one shot are connected to the remote control logic of the Hewlett-Packard tape recorder. As long as is low, the top circuit is active. As soon as Q goes high and $\overline{Q}$ goes low the Forward, Record, and 15-32 Speed Control logic is activated. This continues as long as there is activity on the air.

Also included on module H is an end of tape alarm to signal that there is either a problem in the tape drive or more tape is needed. The end of tape alarm is reset as soon as the tape has been replaced. See figures 3-23 and 3-24 for schematic and layout of module H.

Module I is the interface board for the data acquisition system. This board buffers the data acquisition system with the control panel relay cabinet and the field. The momentary contacts from the switches of the control panel trigger the respective circuits in module I. This circuit then latches onto the signal and holds it for 3 seconds to assure the signal being recorded on tape.

The basic circuit consists of a one shot and inverter driver output. The one shot looks for a momentary ground from the tower which it then converts to a 3 second output pulse. This pulse triggers the A module which is responsible for starting the tone encoding sequence. See figures 3-25 and 3-26 for the schematic and layout of the coard.

4.0 System Setup and Maintenance Procedures

The setup of the VICON system will be performed by the NAFEC engineering group and should require no effort from the local personnel. The maintenance of the system will require certain tasks of the maintenance personnel as listed below.

(1) Maintain the system on a minimal basis.
(2) Maintain a complete log of activities as called for under the requirements of FAA form 6030-1.
(3) Perform daily, weekly and monthly tasks as called for in the enclosed maintenance checklist.
(4) Perform simple troubleshooting of the system.

The setup and connections of all items under Section 4 will be made as called out on the wiring charts and schematics; and the maintenance of these items will be performed as called for in the maintenance checklist provided as Item 4.1.3, of this section. Special instructions on some items are contained in the following paragraphs.

4.1 Control/Display Panel and Control Panel Relay Cabinet

The setup and maintenance procedures for these two items are discussed in detail in Appendix 1 and 2 of this manual.

4.2 Auxiliary Pilot Relay Cabinet

See drawings XD-3004, XD3005 and checklist.

4.3 Timer Relay Cabinet

See drawings XD-3000, XD-3005 and checklist. Each timer will be set for 30 second operation initially.

4.4 Power Relay Cabinet

See drawings XD-3010, XD-3005 and checklist.

4.5 Power Distribution Cabinet

See drawings XD-3008, XD-3005 and checklist. Voltages are adjusted by rotating the Variac knobs clockwise for more and counter-clockwise for less power. Each Variac will control the power to approximately three light clusters of similar voltage drops. A chart of voltage drops at 6.6 amperes will be made and posted for reference. After initial setup, no further adjustments should be necessary.

4.6 Monitor Relay Cabinet

See drawings XD-3011, 3005 and checklist. The pulser timing is set by the use of two knobs, one for "on" time and one for "off" time. Adjust the "on" time for 2 seconds by turning the appropriate knurled knob. Adjust the "off" time for ½ second in the same manner.

4.7 Radio Control System

Refer to figure 1-4, drawing XD-3009, and the RFL manual on the system. If any portion of this radio system malfunctions, switch that portion to hardwire operation by the switch at the remote cabinet and the switch on the control panel relay cabinet in the control tower and inform the NAFEC engineering personnel.

4.8 Microwave Aircraft Detector

See drawing XD-3009 and the Omni Spectra instruction manual.

4.9 Remote Power Supply and Control Cabinets

See drawing XD-3009 and checklist. The procedures for each remote relay cabinet are the same as the hardwire VICON control system in the VICON building except that it is a single complete system instead of a combination of 21 systems. Included in the remote cabinet is the ability to swtich from hardwire to radio control and from timer to microwave aircraft detector. See paragraphs 4.2 through 4.6 for details.

4.10 Light Clusters

See checklist.

4.11 Control and Power Cabling

See drawing XD-3005 and checklist.

4.12 Data Acquisition System

4.12.1 Hewlett-Packard Instrumentation Tape Recorder

(Figure 3-7. Refer to Hewlett-Packard instruction manual for diagrams and maintenance procedures.

SETUP. Set the switches to the following positions:

1. PK-AC, DC Switch to PK-AC.
2. Servo switch to tach.
3. PK-AC button in.
4. Calibrator-2.5 v.
5. Volume control off.
6. All DIR buttons OUT position. If any one of these switches are IN, the cal lamp will be lit. Make sure this lamp is out!
7. All inputs and outputs have been preset. set. Do not change the settings. To observe an input or output simply select a metered channel selector switch (one through four) and depress the monitor input or output; the meter will give an indication of what is happening.
8. Tape head cover plate; pull top of plate and swing down. Inside of the plate is a tape threading diagram.

9. The speed and mode switches are self-explanatory. When the system is in the automatic mode there is no control of these switches.

TAPE. To change a tape first set the TA-TM switch on the button panel directly below the display to TM (Tape Manual). This will give complete control of tape recorder.

After the tape has been replaced, press the counter button (10) so it will reset to zero, then make sure the TM-TA switch is back in the TA position (Tape Automatic), otherwise no data will be recorded.

4.12.2 Display Panel (Figure 3-7)

When power is turned on, all the LEDs will light and the override will begin to oscillate; clear this by pressing clear twice. Clear is an alternate action swtich and must be returned to its N.O. position. When it is closed, a green LED will light on the E card. Make sure this LED is out; this will indicate the proper clear switch position.

The lamp test switch is also an alternate action switch, it will light all segments of the runway display only. Return to normal position after test.

The override light will come on when the override button in the tower is pushed. It will also produce an audible tone.

The tape alarm sounds when the tape drive is slackened indicating end of tape or loss of tension on the heads. To correct this, simply hand tighten the tape or install a new reel of tape as necessary.

The button panel can be connected to the back of the card rack for system testing. In normal operation the plug J1 is attached to the relay control box to accept input signals from the control tower. To use test buttons the J1 cable must be removed and the test panel plugged in.

The TA-TM switch (TA = Tape Automatic, TM = Tape Manual) is located on the left-hand side of the button panel. This switch is always connected.

Placing this switch to the TM removes the recorder from automatic control. This switch must be in TA for data recording.

On Module B there is a record playback switch; this must be in record position for data collection.

Module H has 5 switches for audio output of the tape channels.

4.12.3 Time Code Generator Reader (Figure 3-7)

Refer to Systron Donner Manual for maintenance procedures.

SETUP

1. Turn knob to hold.
2. Set thumbwheel switches to desired setting for days, hours, minutes, and seconds.
3. Push preset up and then back to center position.
4. Turn knob to Generate (GEN).

TROUBLESHOOTING CHART

Trouble	Causes
(5.1)	No lights on control panel.
	(A) Lamp burned out - replace lamp.
	(B) Dinner control turned down on panel.
	(C) Power on fourth floor control cabinet off - see control panel maintenance manual (Appendix 1).
	(D) Circuit breakers in VICON building tripped - reset.
	(E) Fuse blown in auxiliary pilot relay cabinet in VICON building. If fuse O.K. see trouble no. 5.4.
	(F) Monitor relay does not operate properly. If not, see trouble no. 5.6.
	(G) No signal from control panel - see maintenance manual on control panel (Appendix 1).
	(H) No power to field. See trouble no. 5.7.
(5.1.1)	No lights on approach end of runways 6, 15, 24, or 33.
	(A) Radio problem - see trouble no. 5.10.
(5.2.0)	Green monitor light comes on but yellow light returns after short delay and monitor light goes out.
	(A) Timer in control cabinet on fourth floor too short - extend time. See appropriate maintenance manual (Appendix 1).
	(B) Radio problem. See trouble no. 5.10.
(5.3.0)	Green and yellow lights come on and stay on.
	(A) Check pulser in monitor relay cabinet in VICON building.
	(B) Radio problem - see trouble no. 5.10.
(5.3.1)	Green light comes on and stays on only momentarily.
	(A) See troubles 5.4 and 5.10. (Pilot relays or radio.)

TROUBLESHOOTING CHART

Trouble	Causes
(5.4.0)	Pilot relay does not latch but clicks when button in tower is pushed.
	(A) No ground from timer relay - relay not being reset - faulty timer, replace timer relay.
	(B) No ground to timer relay from override - trace and correct.
(5.4.1)	Pilot relay latches but does not unlatch when override is pushed or when timer cycles.
	(A) Signal to start sequence is not momentary. Check input lines to pilot relays. (Possible continuous ground on input to pilot relays.)
(5.4.2)	All pilot relays do not self-latch, but each individual relay will hold when control button is held depressed continuously.
(5.5.0)	Timer relay not being set or reset.
	(A) Check to see if there is power to the timers from the pilot relay.
	(B) Check for shorted contracts on pilot relay. Replace as necessary. See trouble no. 5.4.
(5.6.0)	Power relay not working.
	(A) Check power to coil from pilot relay. See trouble no. 5.4.
	(B) If power to coil is O.K, replace power relay.
(5.7.0)	No power to light clusters.
	(A) Power relay defective. See trouble no. 5.6.
	(B) Check power at outputs of variacs.
	If no power - check circuit breakers and/or main breakers at entrance to VICON building. If power - check fuses in distribution cabinet.

RADIO TROUBLESHOOTING

The runway ends of 06, 15, 24, and 33, operate both by radio or hardwire. If these are operating on radio, the following possible troubles can occur.

RADIO TROUBLESHOOTING

(5.8.0) Lights do not turn on.

(A) No radio communications. See if Master station is polling. If not polling, see trouble no. 5.10.

(B) See if Remote station is receiving and is transmitting.

(C) Check relay control cabinet in the field for proper operation. See troubles 5.4 through 5.7.

(5.9.0) Lights do not turn off.

(A) Remote not receiving signal from override - remote not working. See trouble no. 5.10.

(B) Microwave Aircraft Detector not operating properly. See trouble no. 5.10.1.

(C) Timer not functioning properly. See trouble no. 5.5.

(5.10.0) Radio inoperative.

(A) Change to hardwire operation.

Two sets of toggle switches are involved:

Location 1 - on the fourth floor of the tower, on the right side of the relay control panel cabinet. Put switches into hardwire position for runways of interest.

Location 2 - At the site of interest (runways 06, 15, 24, or 33), inside the relay cabinet, upper right-hand corner. Change position to hardwire.

(5.10.1) Microwave Aircraft Detector not working.

(A) See operations manual on this system.

(B) Change to timer operation by switch in relay cabinet.

V I C O N

PARTS LIST

	DESCRIPTION	FSN &/or P/N	TOTAL REQUIRED	NUMBER OF SPARES
6.1	Auxiliary Pilot Relay Cabinet (modified L-841) Hughey & Phillips Catalog # RC41 (modified) Crouse - Hinds Co. model # 5150B (modified)	5945-00-NA2-5000	1	0
6.1.1	48 volt relays, 10 amp contacts, 120 volt 60 Hz. Hughey & Phillips p/n KR5498 Struthers-Dunn p/n A283XBXC KA480DV1022C	5945-00-N90-3395	23	5
6.1.2	M O V ARC Suppressor (back to back diodes) G.E. 130 volt		46	12
6.1.3	Capacitors Sprague PBTB-365 .5 ufd, 600 volt		23	4
6.1.4	Resistors, 100 ohm, 2 watt		23	4
6.1.5	Power Supply, 48 volt Hughey & Phillips p/n AU 5894		1	1
6.1.6	Fuse, Fusetron, 2 amp	5920-00-983-3571	2	10
6.1.7	Transformer		1	
6.1.8	Photocell, P-2275 with M2A Mount Precision Multiple Controls, Inc.	5930-00-911-2117	1	1

V I C O N

P A R T S L I S T

	DESCRIPTION	FSN &/or P/N	TOTAL REQUIRED	NUMBER OF SPARES
6.2	Timer Relay Cabinet		1	0
6.2.1	Timer Relays, Potter & Brumfield p/n CUB51-70120	5945-00-N84-6241	21	3
6.2.2	Sockets, Industrial screw terminal Potter & Brumfield p/n 27E121 10 amps, @ 277 VAC		21	8
6.3	Power Relay Cabinet Multi Electric Type I	5945-00-NA2-5009 Cat. # MB-21961	1	0
6.3.1	Power Relays Potter & Brumfield p/n PRD11AYO	5945-01-047-9706	21	6

V I C O N

P A R T S L I S T

	DESCRIPTION	FSN &/or P/N	TOTAL REQUIRED	NUMBER OF SPARES
6.4	Power Distribution Cabinet		1	0
6.4.1	Autotransformers, 10 amp, variable General Radio "Variacs" p/n W10G2	6120-00-NA2-5137	7	1
6.4.2	Relays, "HI/LO" Control Potter & Brumfield	5945-01-047-9706 PRD11AY0	7	1 (see 8.1)
6.4.3	Fuses, KAA20 (13/32 x 1½) 20 amps, 130 volts	5920-00-121-5539	7	10
6.4.4	Fuse Holders Buchanan Fuse & Switch Contacts	5920-00-199-8338 Cat. # 352	7	3
6.4.5	Circuit Breakers Square D	QO T 2020	4	1
6.4.6	Circuit Breakers Square D	QO 260	1	1

V I C O N

P A R T S L I S T

	DESCRIPTION	FSN &/or P/N	TOTAL REQUIRED	NUMBER OF SPARES
6.5	Monitor Relay Cabinet		1	0
6.5.1	Monitor Relays, Sensitive Struthers - Dunn, Contacts 2 amps @ 120 V P.U. 3 amps, D.O. 2 amps or more	5945-00-NA2-5139 p/n 112XAX595	21	3
6.5.2	Pulser, with relay ISSC	1060-1-E-E-1-B	1	1
6.5.3	Pulser Current Relays Potter & Brumfield	5945-01-047-9706 PRD11AYO	4	(see 8.1)
6.6	Radio Control System (One Master & 4 Remotes) Radio Frequency Labs, Inc.	5820-00-NA2-5030	1	0
6.6.1	Spare Chassis, Complete Remote Station RFL, Inc.		0	1
6.6.2	Antenna, Master Station Chatham Associates, 167-170.5 Mhz.	Model # ASPG80	1	1
6.6.3	Transceiver, 169.225 Mhz. RFL, Inc.	5895-00-NA2-3948 p/n 91760-002	5	1

V I C O N

PARTS LIST

	DESCRIPTION	FSN &/or P/N	TOTAL REQUIRED	NUMBER OF SPARES
6.7	Microwave Aircraft Detector Omni-Spectra	Model 300-33086	4	0
6.7.1	Transmitter	Model 300T-33086	4	2
6.7.2	Receiver	Model 300R-33086	4	2
6.7.3	Power Supply	Model PS-40	8	2
6.7.4	Frangible Coupling Sepco	p/n 25071	8	4
6.7.5	Thinwall Poles, E.M.T., Conduit	5975-00-178-1221	8	2
6.7.6	Electrolet Box, Killark 2 inch with threaded connections on both ends.		8	0
6.7.7	Nipples, pipe, NPT 2", 2.5" lg		8	0

V I C O N

PARTS LIST

	DESCRIPTION	FSN &/or P/N	TOTAL REQUIRED	NUMBER OF SPARES
6.8	Remote Power and Control Cabinet		4	0
6.8.1	Autotransformers, 8 amp, variable General Radio "Variacs"	6120-00-NA2-5136 p/n W8G2	4	1
6.8.2	Pulser, with relay ISSC	1060-1-E-E-1-B	4	(see 10.2)
6.8.3	Timer Relays Potter & Brumfield	5945-00-N84-6241 p/n CUB51-70120	4	(see 7.1)
6.8.4	Power Relay Potter & Brumfield	5945-01-047-9706 p/n PRD11AYO	8	(see 8.1)
6.8.5	Control Relay Potter & Brumfield	5045-01-026-3436 KUP11A15-120	8	2
6.8.6	Fuse, 20 amp, KAA20 130 volts (13/32 x 1½)	5920-00-121-5539	4	(see 9.3)
6.8.7	Fuse Holders Buchanan Fuse & Switch Contacts	5920-00-199-8338 Cat. # 352	4	(see 9.4)
6.8.8	Photocell, P-2275 with M2A mounts Precision Multiple Controls, Inc. or Pullan K2011-9	5930-00-911-2117	4	(see 6.8)
6.8.9	Sockets, P&B 27E121		16	(see 7.2)

V I C O N

PARTS LIST

	DESCRIPTION	FSN &/or P/N	TOTAL REQUIRED	NUMBER OF SPARES
6.9	Light Clusters		21	0
6.9.1	PAR-56 Lamps, Q6.6A/PAR56/2	6240-00-538-8853	63	10
6.9.2	Filters, green Multi Electric	p/n 894-3G	63	10
6.9.3	Lamp Holder, low profile Multi Electric	6250-00-N80-5653 p/n 893	63	4
6.9.4	Frangible Couplings	6210-00-565-1572	63	6
6.9.5	Cluster Base		21	2

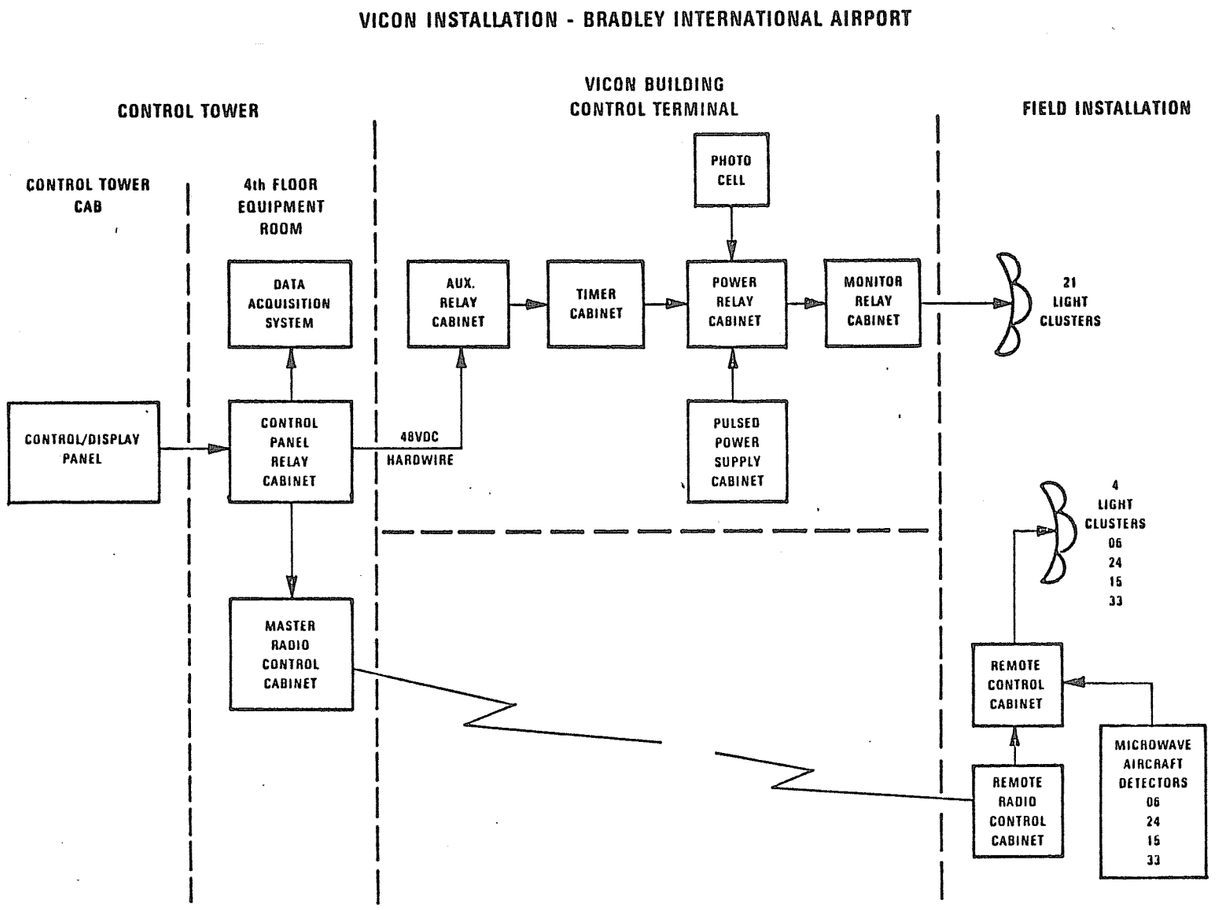

Block Diagram of VICON System
Figure 1-1

NOTE:-

LIGHT CLUSTER PADS TO BE LOCATED ON A LINE 2'-0" OUTBOARD OF EXISTING R/W EDGE LIGHT LINE AT DISTANCE FROM INTERSECTION SHOWN ± 25'-0". LIGHT CLUSTER PADS SHALL BE AT LEAST 5'-0" FROM ANY EXISTING R/W EDGE LIGHT.

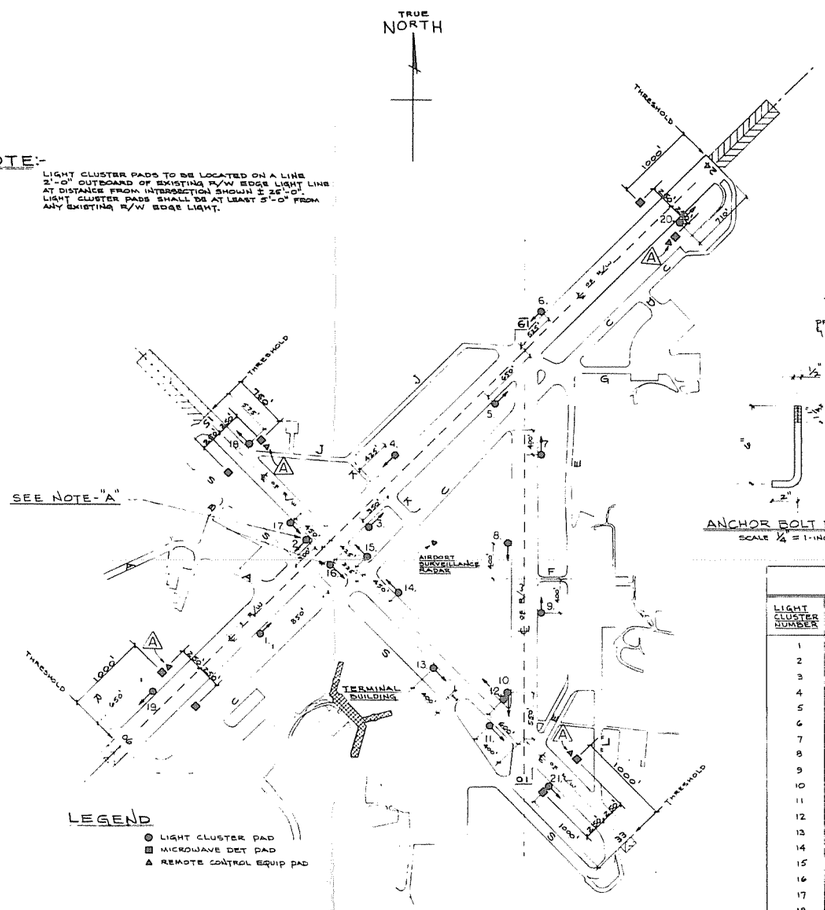

A/B LIGHT CLUSTERS LOCATION PLAN

SCALE 1" = 600'

NOTE-"A"

LIGHT CLUSTER PAD #2 ORIENTED W/RESPECT TO R/W 06-24
LIGHT CLUSTER PAD # 16 ORIENTED W/RESPECT TO R/W 15-33

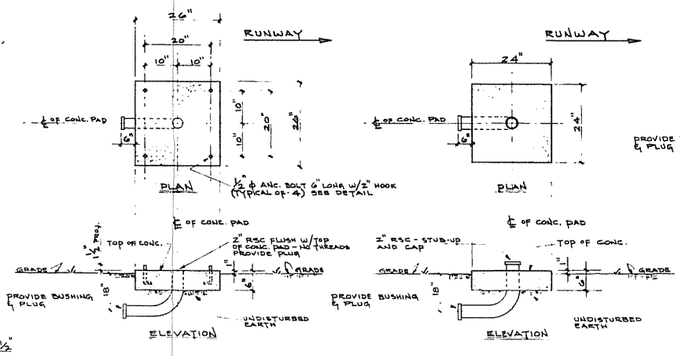

LIGHT CLUSTER MTG. PAD DETAIL

NO SCALE

MICROWAVE DETECTOR EQUIP. PAD DETAIL

NO SCALE

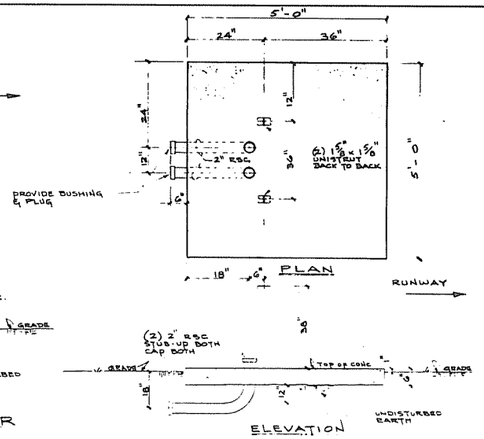

RADIO REMOTE CONTROL EQUIP PAD DETAIL

NO SCALE

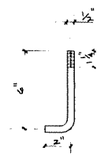

ANCHOR BOLT DETAIL

SCALE ½ = 1-INCH

NOTE:- ALL CONDUIT, ANCHOR BOLTS & UNISTRUT SHALL BE GALVANIZED

A CABLE TABLE

LIGHT CLUSTER NUMBER	LENGTH OF RUN	CONDUCTOR QUANITY & SIZE	VOLTAGE DROP	TRANSFORMER	REMARKS
1	2765'	# 8	24	E	
2	2035'	# 10	27	F	
3	1005'	# 10	14	A	
4	2720'	# 8	23	E	
5	2360'	# 8	20	C	
6	4200'	# 6	23	E	
7	2445'	# 8	21	D	
8	1480'	# 10	20	C	
9	3775'	# 6	20	C	
10	2400'	# 8	20	B	
11	2920'	# 8	25	F	
12	2455'	# 8	21	D	
13	3780'	# 6	20	B	
14	760'	# 10	10	A	
15	1035'	# 10	14	A	
16	1610'	# 10	22	D	
17	2300'	# 8	19	B	
18	2650'	# 8	22	G	
19	4870'	# 6	26	G	
20	4835'	# 6	26	G	
21	3645'	# 6	20	G	

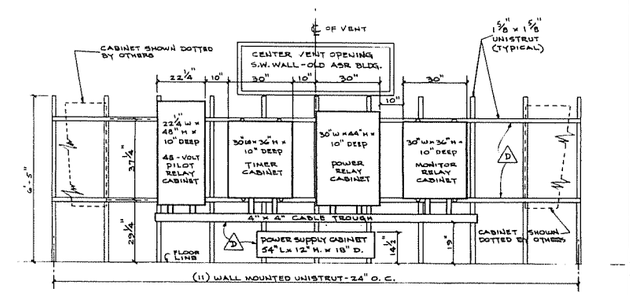

A UNISTRUT MOUNTING LAYOUT-ASR BLDG.

NO SCALE

VICON = VISUAL CONFIRMATION OF VOICE TAKE-OFF CLEARANCE

ABBREVIATIONS

RSC	-	RIGID STEEL CONDUIT
℄	-	CENTERLINE
CONC.	-	CONCRETE
EQUIP	-	EQUIPMENT
M'T'G.	-	MOUNTING
DET	-	DETECTOR
R/W	-	RUNWAY
OP'N'G	-	OPENING
S.W.	-	SOUTHWEST
ASR	-	AIRPORT SURVEILLANCE RADAR
BLDG.	-	BUILDING
W	-	WITH

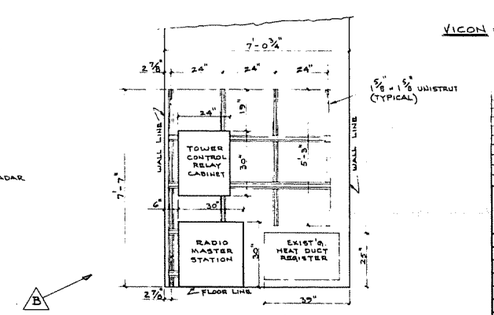

B UNISTRUT MOUNTING LAYOUT-4TH FL. OF CONTROL TWR.

SCALE ½ = 1-FT.

SYMBOL	REVISIONS	DATE	APPROVAL
A	RELOCATED HORIZ. UNISTRUT & POWER SUPPLY CABINET - ADDED 4x4 CABLE TROUGH	11/14/79	
A	COMPLETELY REVISED "CABLE TABLE"	11/14/79	
A	ADDED DIMENSIONS & ARROWS TO PLAN - ADDED 6" DIMENSION & NAMES OF CABINETS TO DETAIL - ADDED ELEV. DETAIL FOR 4TH FL. OF CONTROL TOWER	11/14/79	
A	RELOCATED (4) REMOTE CONTROL EQUIP PADS - PLAN AND [illegible] ASR BLDG.	11/22/79	

REFERENCED DRAWINGS

DEPARTMENT OF TRANSPORTATION
FEDERAL AVIATION ADMINISTRATION
NATIONAL AVIATION FACILITIES EXPERIMENTAL CENTER
ATLANTIC CITY, NEW JERSEY

	DATE
DESIGN	
DRAWN L.H. THOMPSON	7-24-78
CHECKED	
CHECKED	

WINDSOR LOCKS, CONN.
BRADLEY INTERNATIONAL AIRPORT

VICON

LIGHT CLUSTERS LOCATIONS & DETAILS

SATISFACTORY TO: Bret Castle, ANA-430 — CHIEF — DATE 7-25-78

APPROVED BY — CHIEF — DATE

XC-1306

SHEET 1 OF 1

SCALE AS NOTED

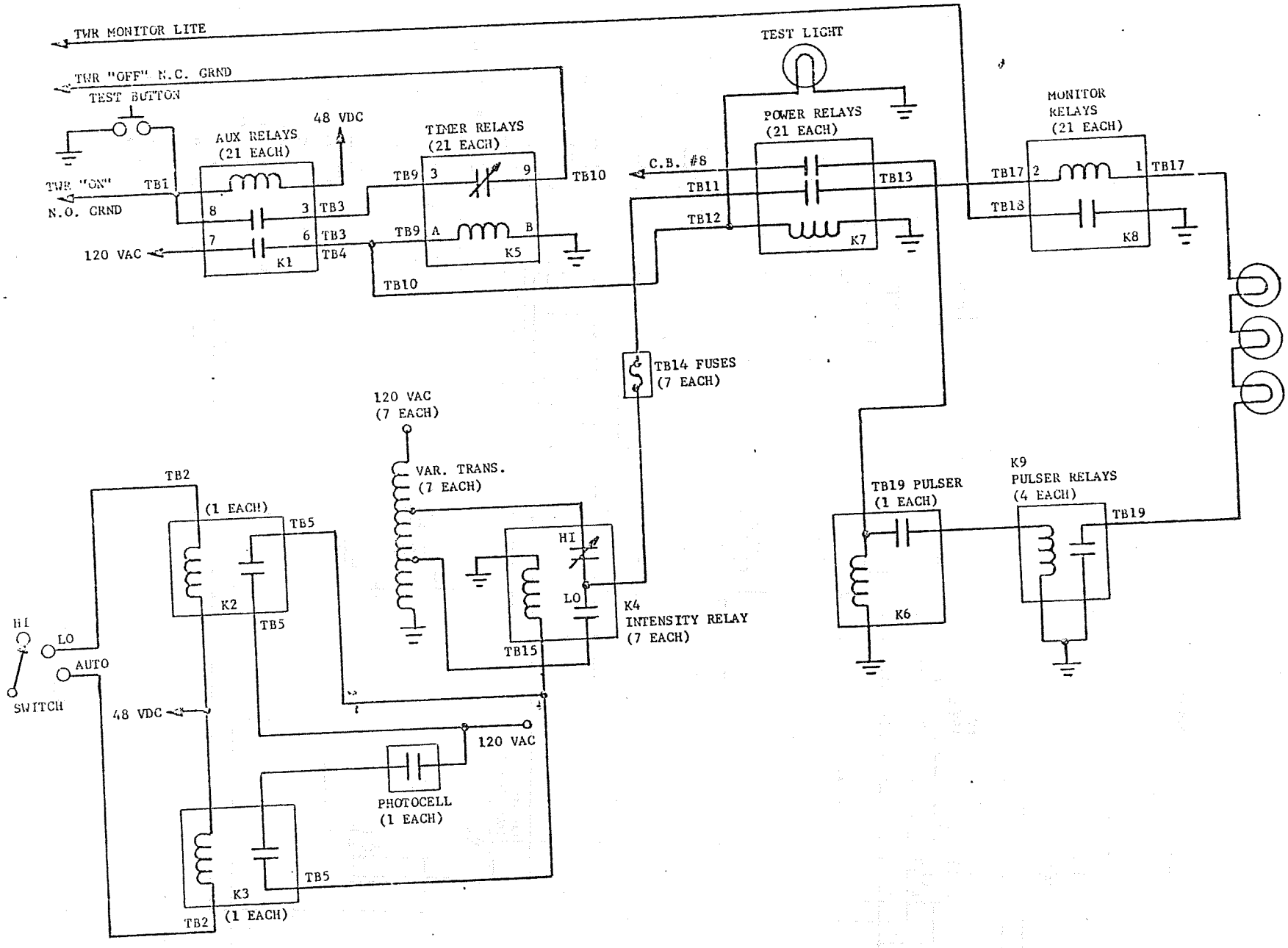

Simplified Hardwire Schematic
Figure 1-3

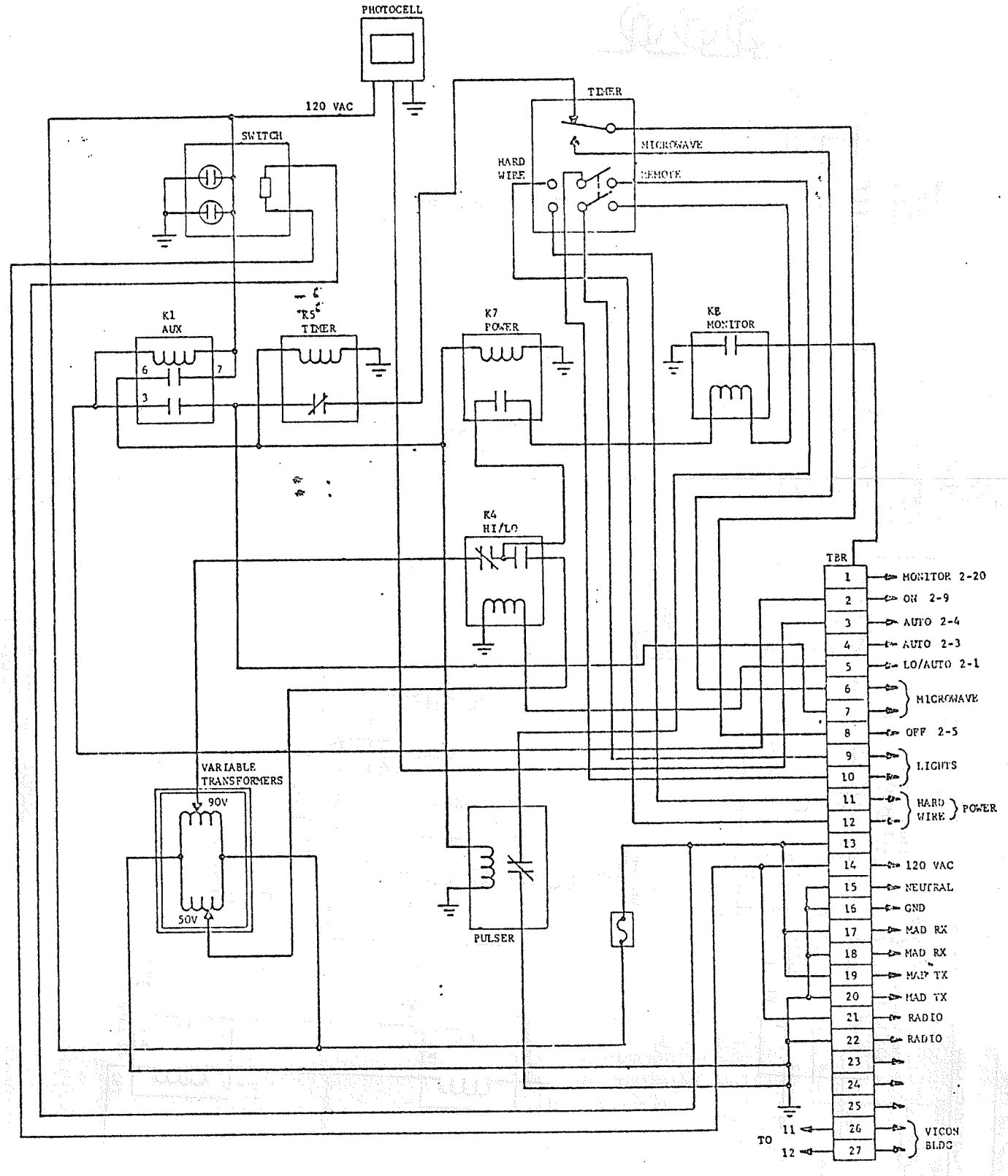

Simplified Radio Control Schematic
Figure 1-4

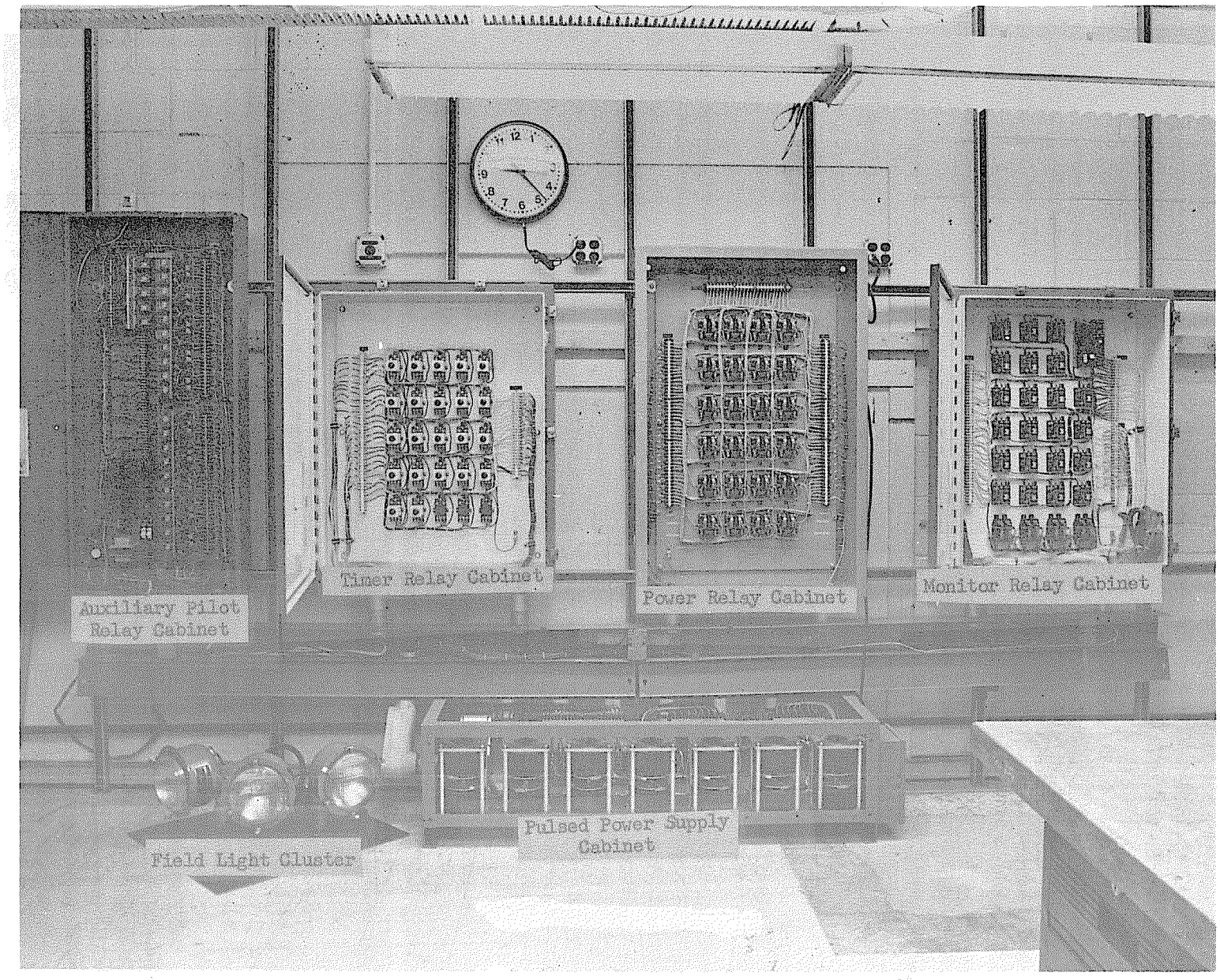

FIGURE 1-5. HARDWIRE CONTROL SYSTEM

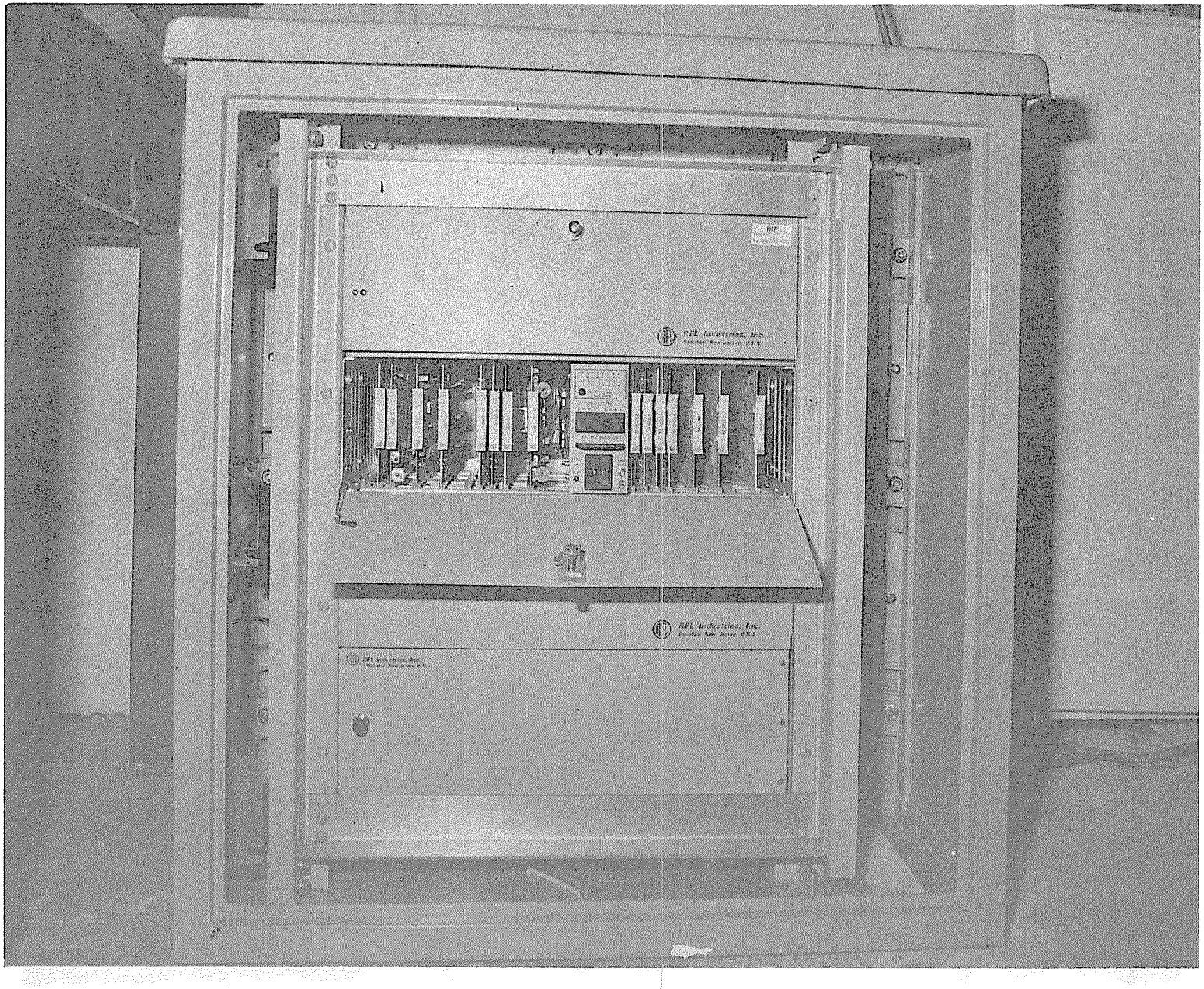

FIGURE 1-6. RADIO CONTROL SYSTEM

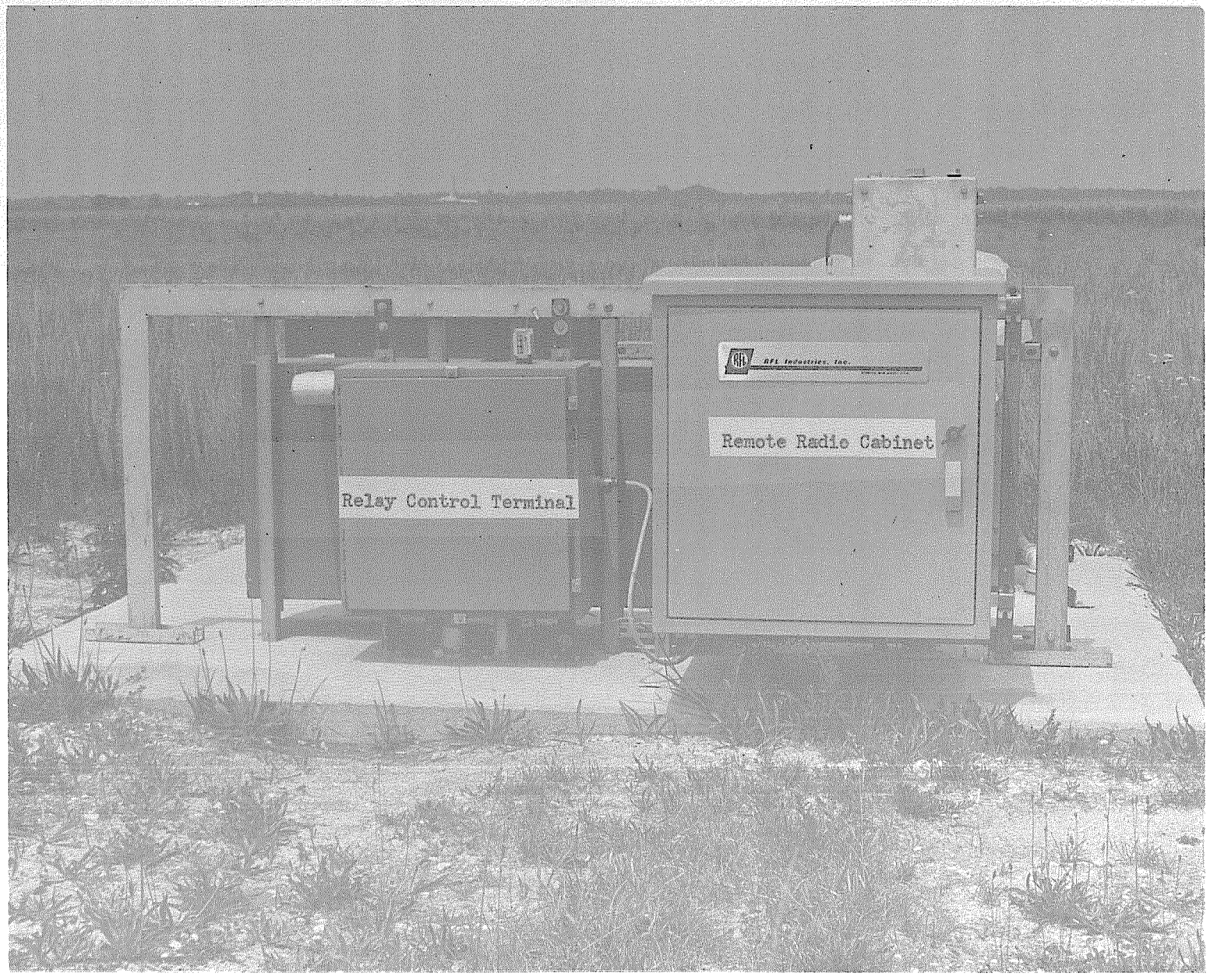

FIGURE 1-7. RADIO CONTROL TERMINAL

FIGURE 1-8. MICROWAVE AIRCRAFT DETECTOR

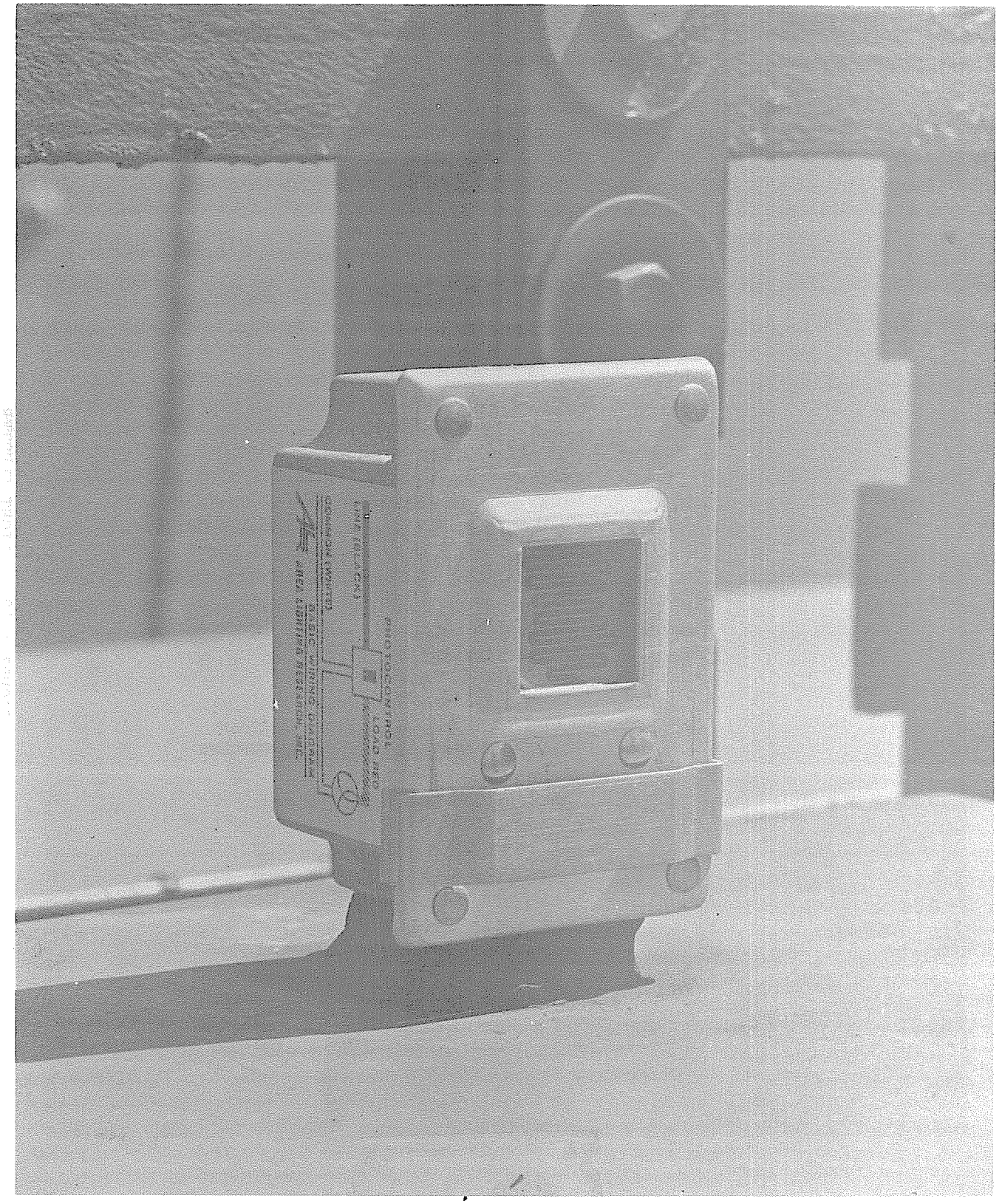

FIGURE 1-9. PHOTOCELL

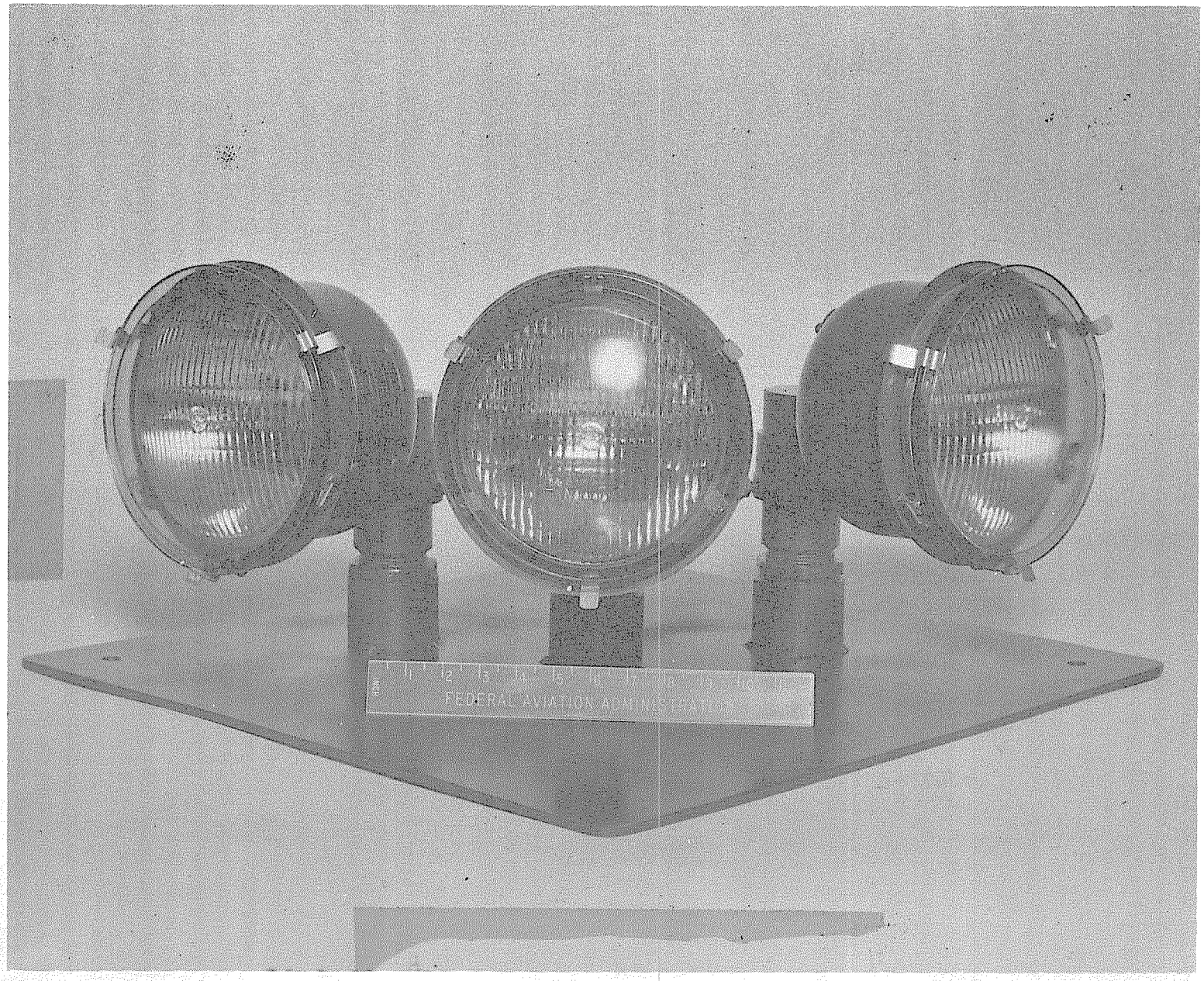

FIGURE 1-10. LIGHT CLUSTER

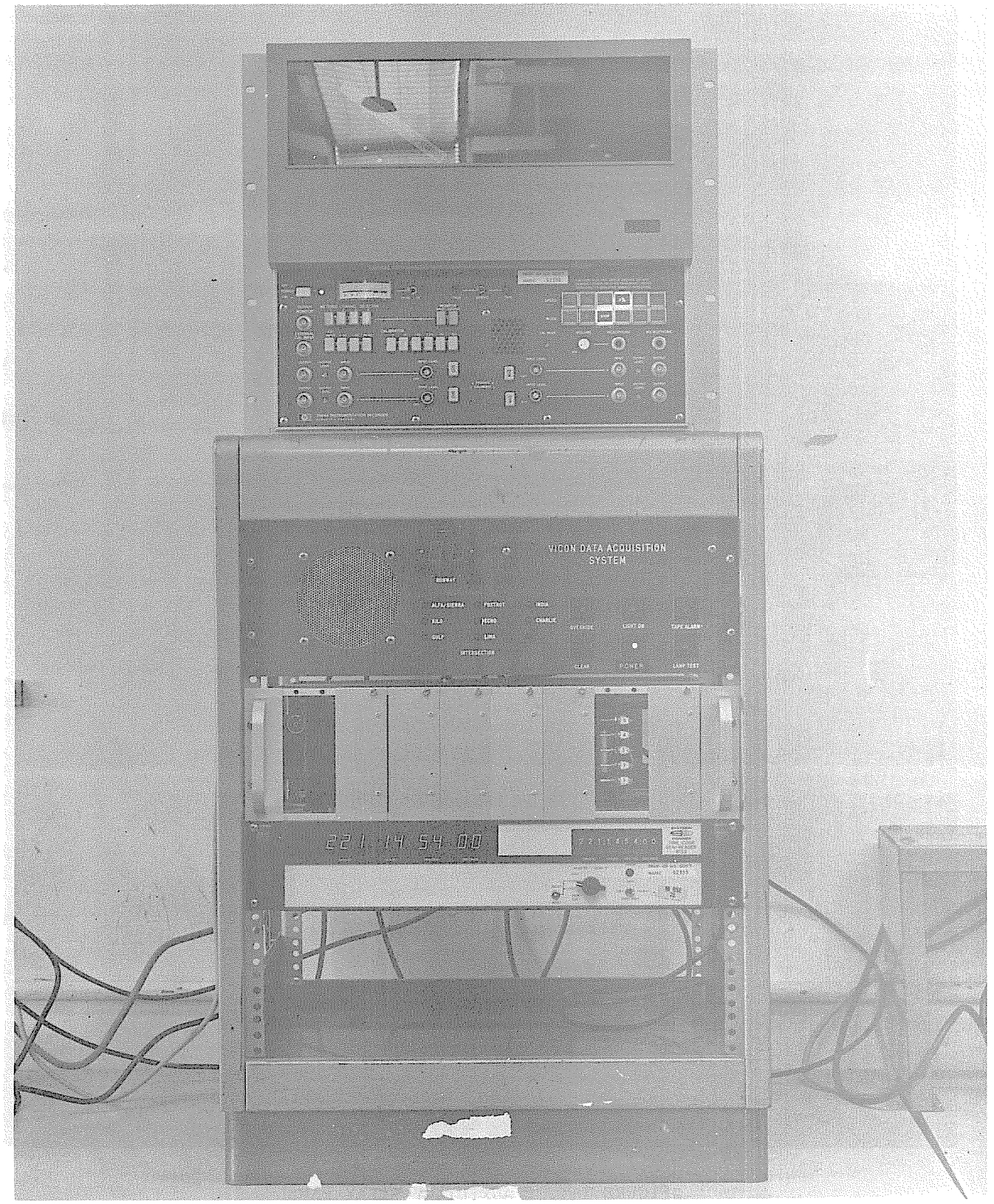

FIGURE 1-11. DATA ACQUISITION SYSTEM

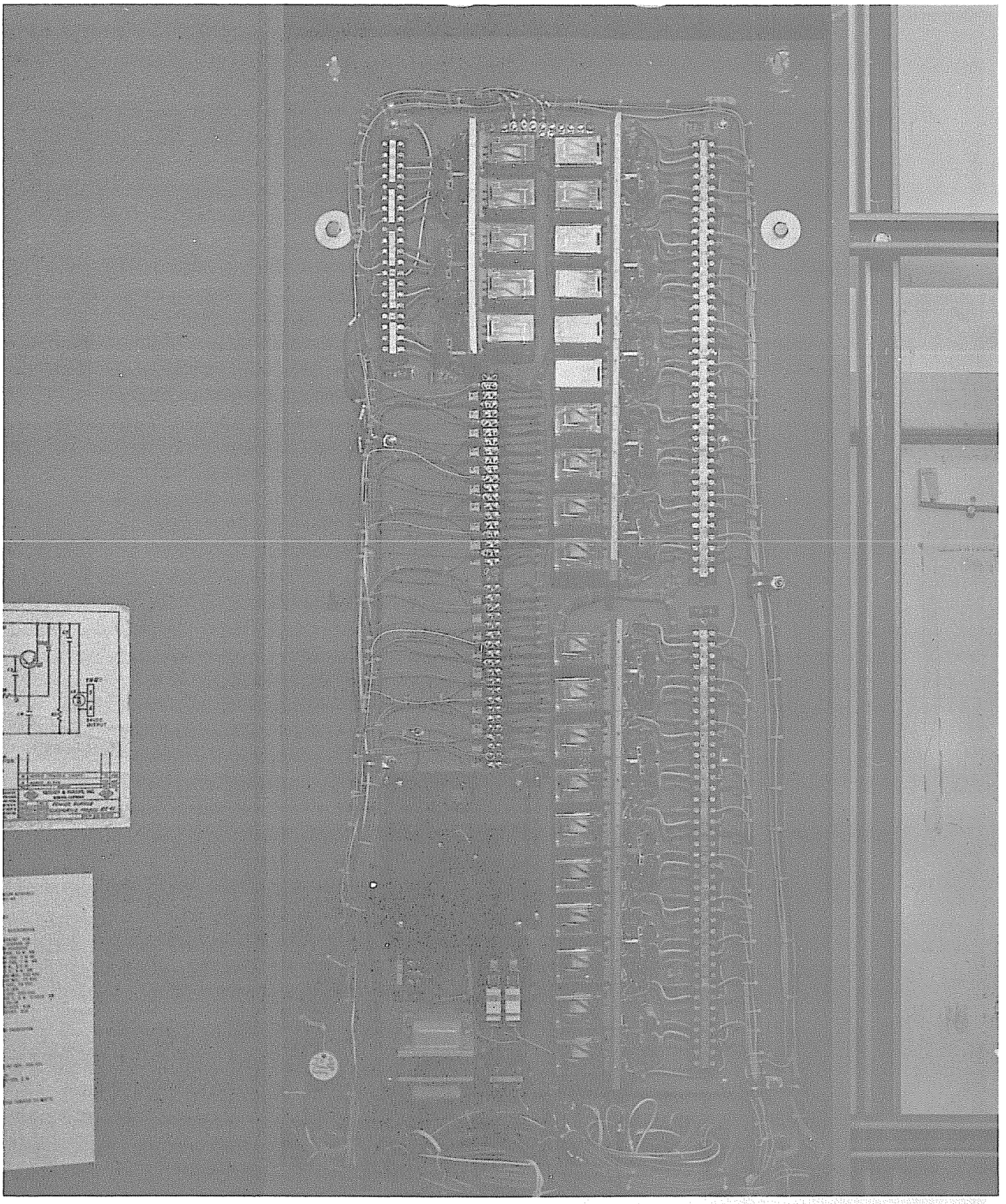

FIGURE 3-1. AUXILIARY RELAY PANEL

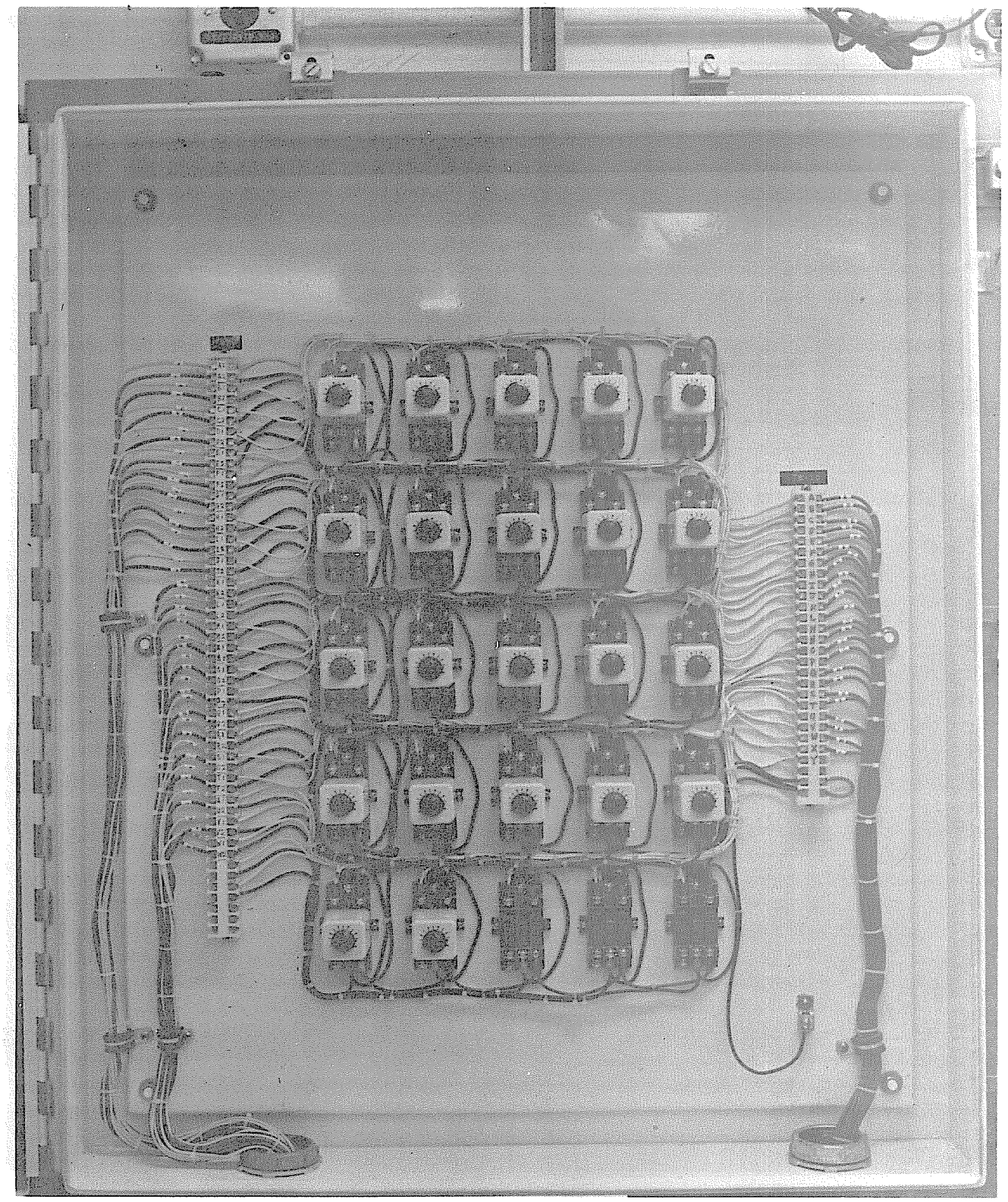

FIGURE 3-2. TIMER RELAY PANEL

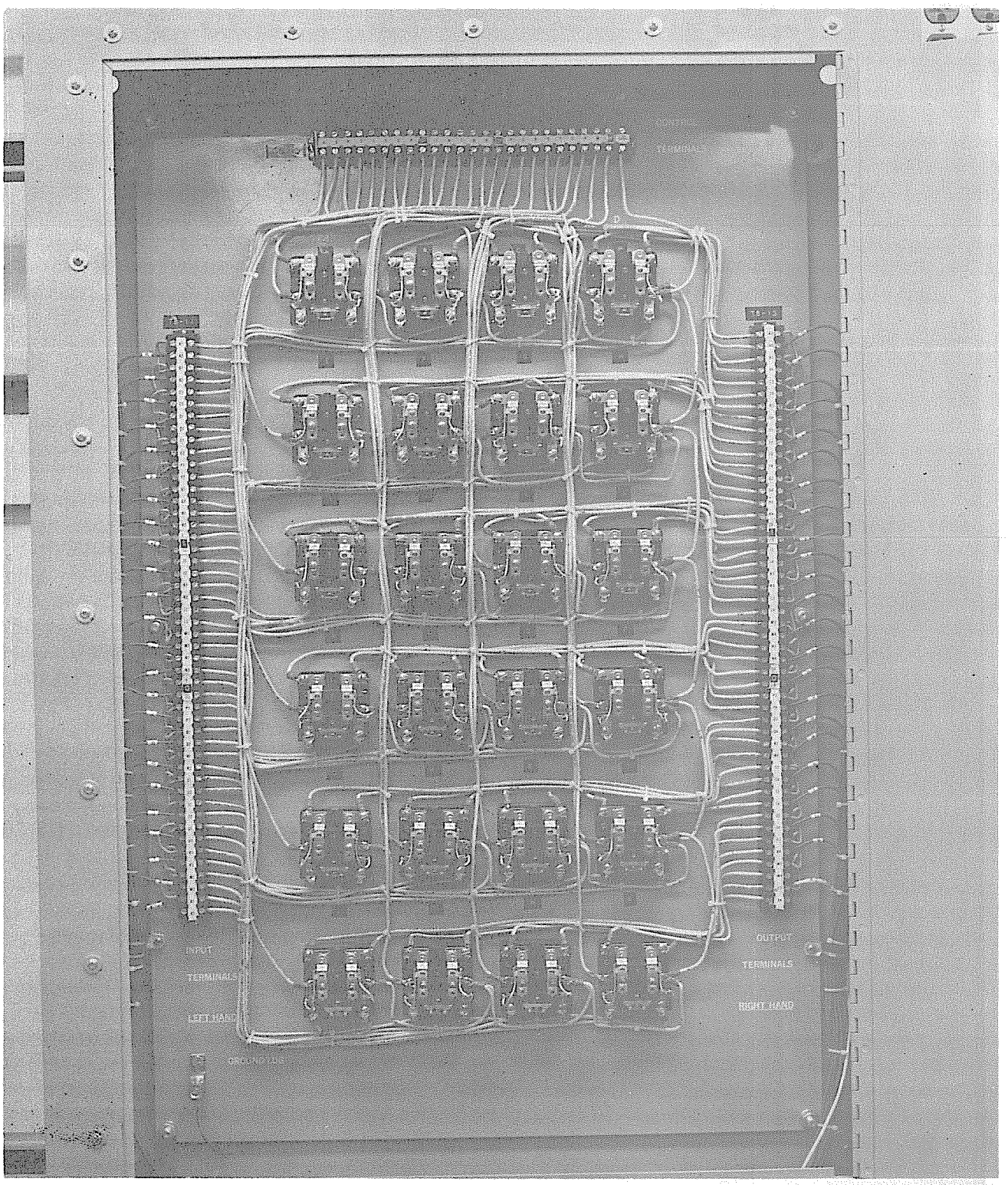

FIGURE 3-3. POWER RELAY PANEL

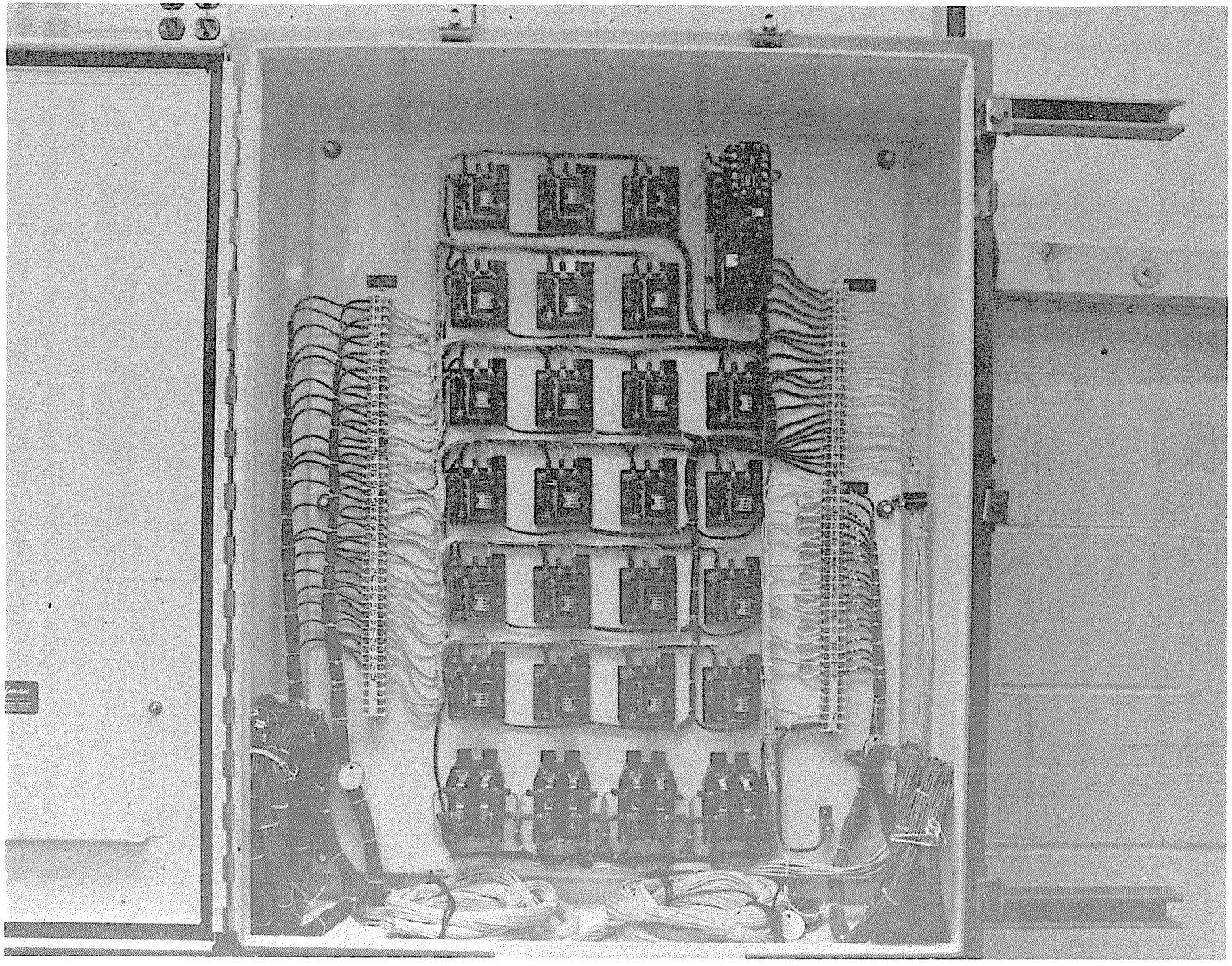

FIGURE 3-4. MONITOR RELAY PANEL

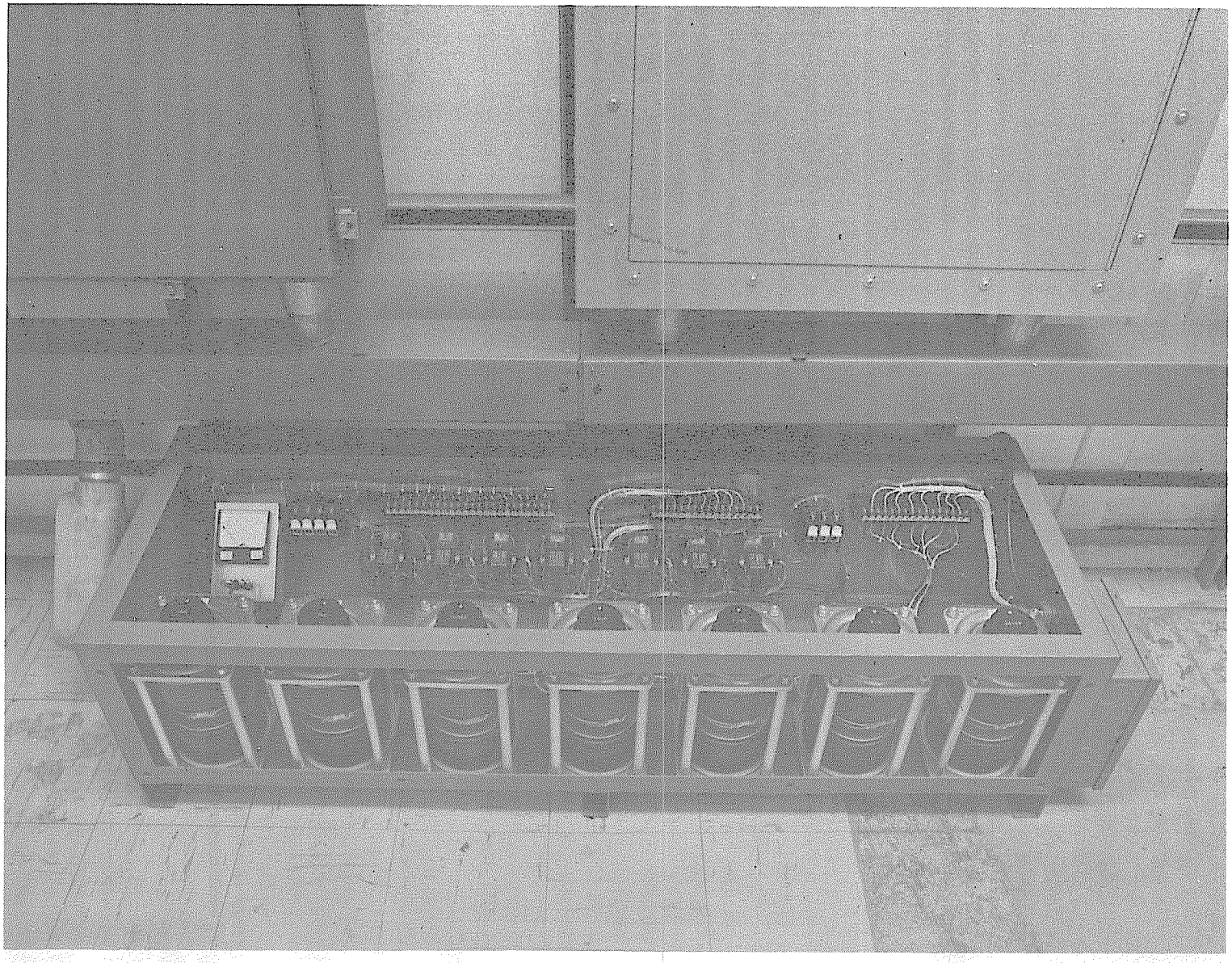

FIGURE 3-5. POWER DISTRIBUTION CABINET

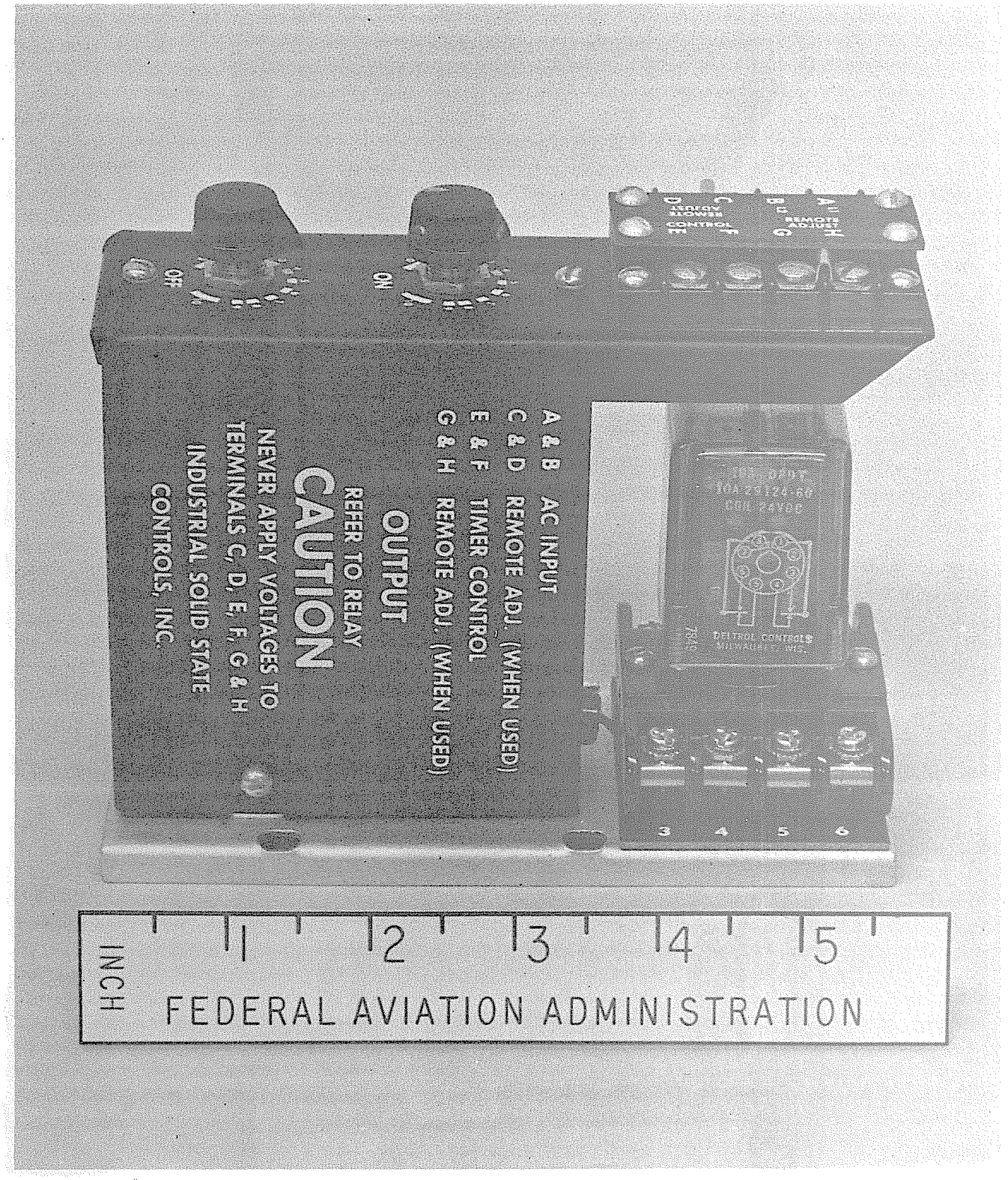

FIGURE 3-6. PULSER ASSEMBLY

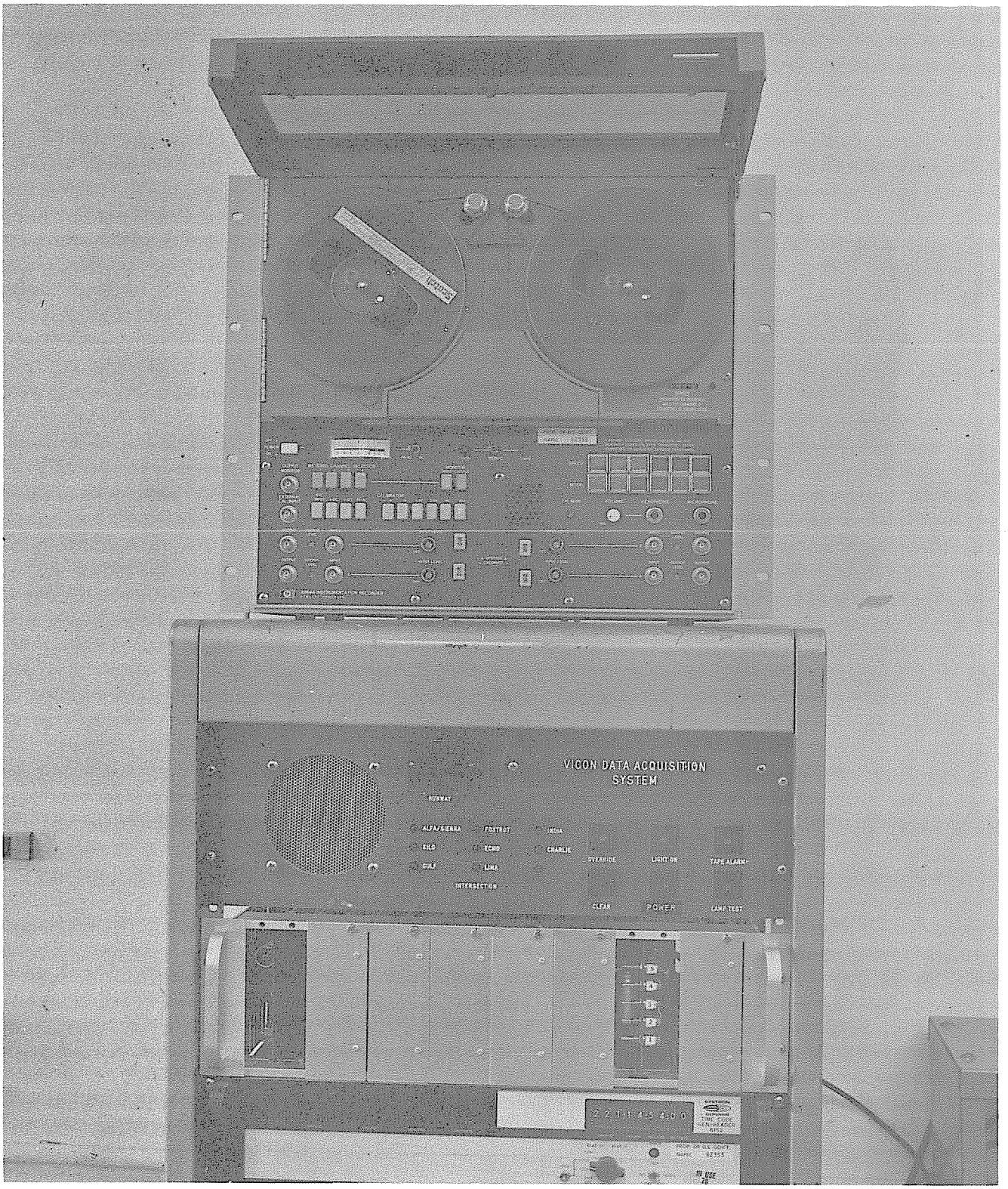

FIGURE 3-7. DATA ACQUISITION SYSTEM

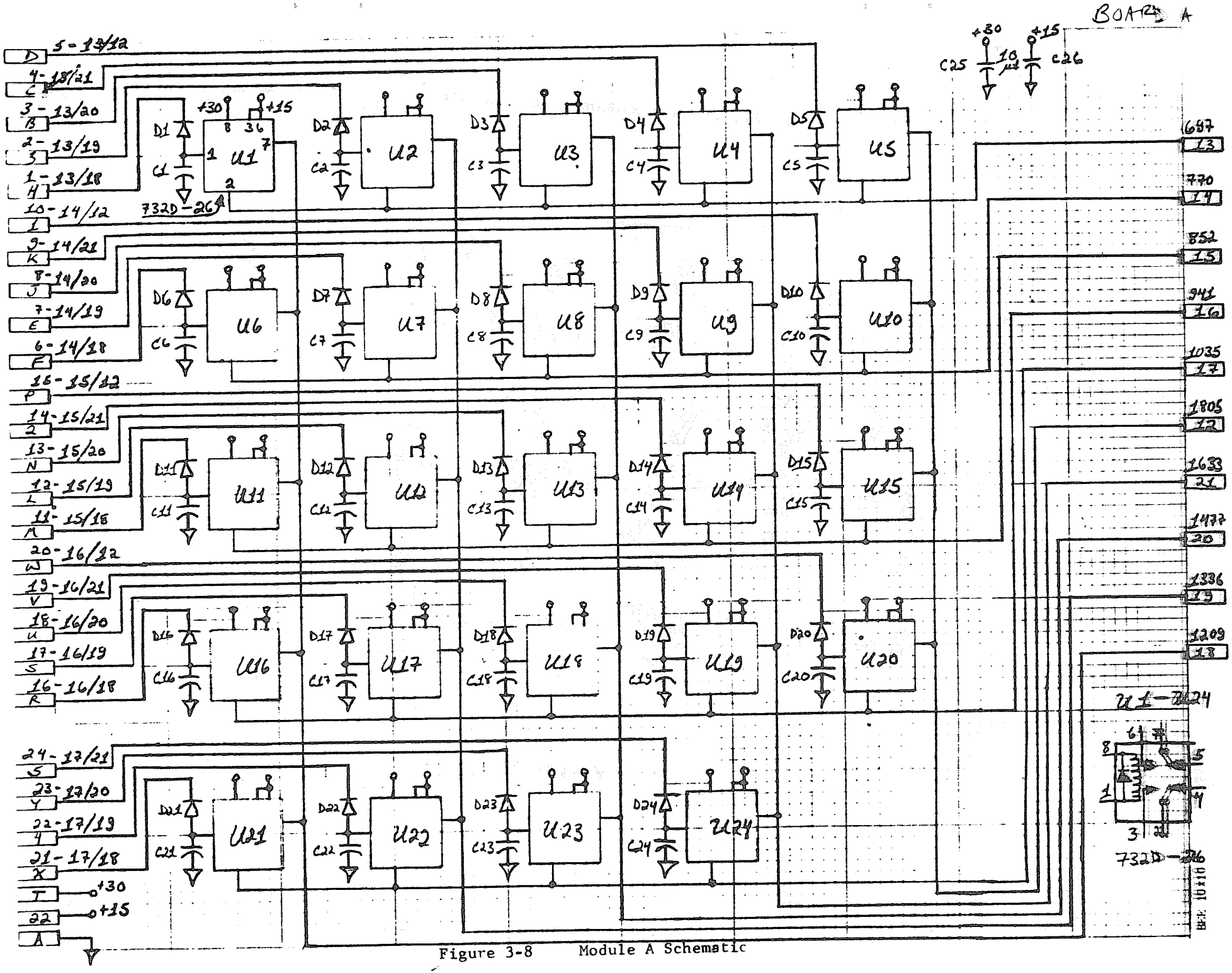

Figure 3-8 Module A Schematic

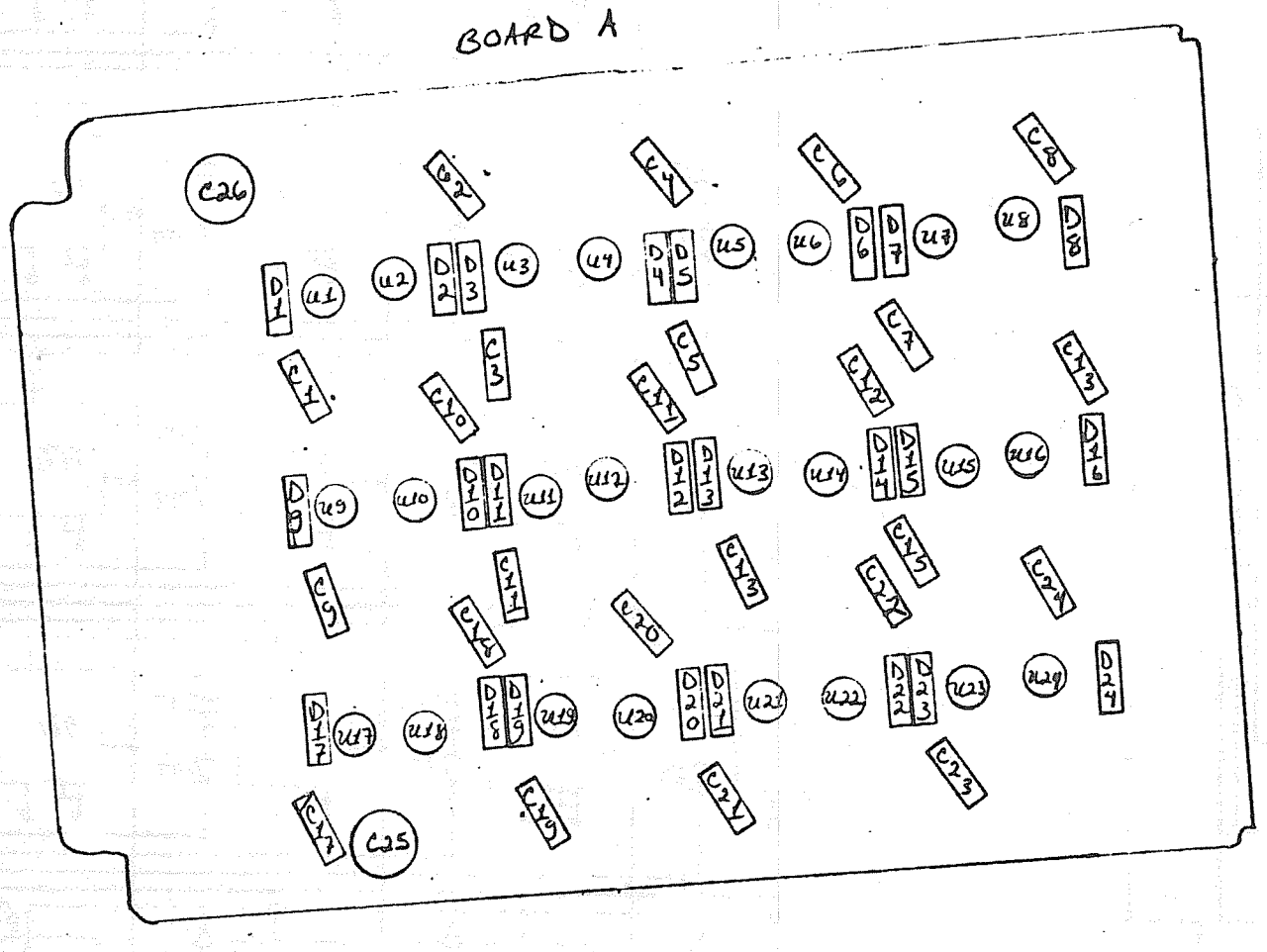

FIGURE 3-9. MODULE A BOARD LAYOUT

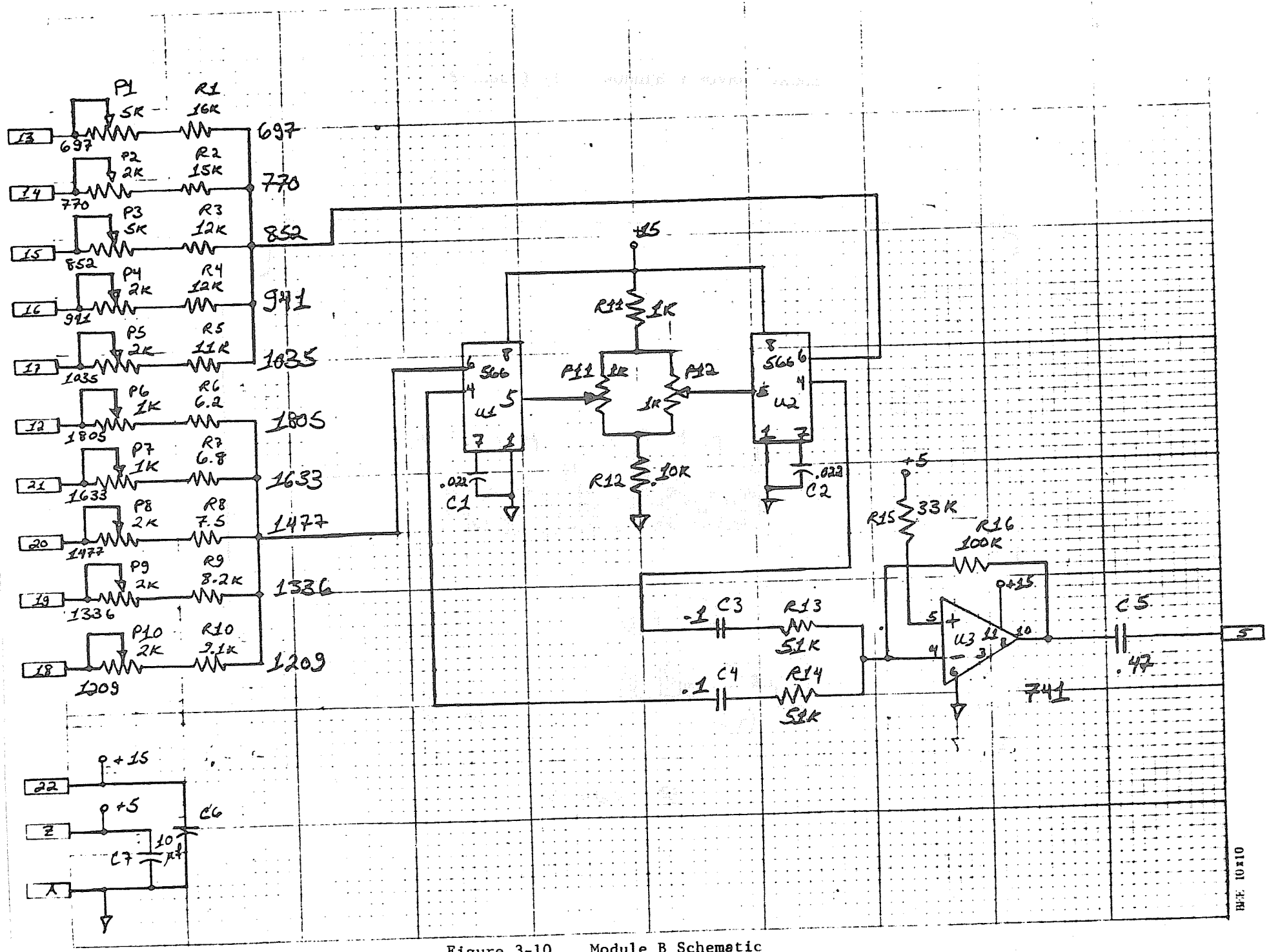

Figure 3-10 Module B Schematic

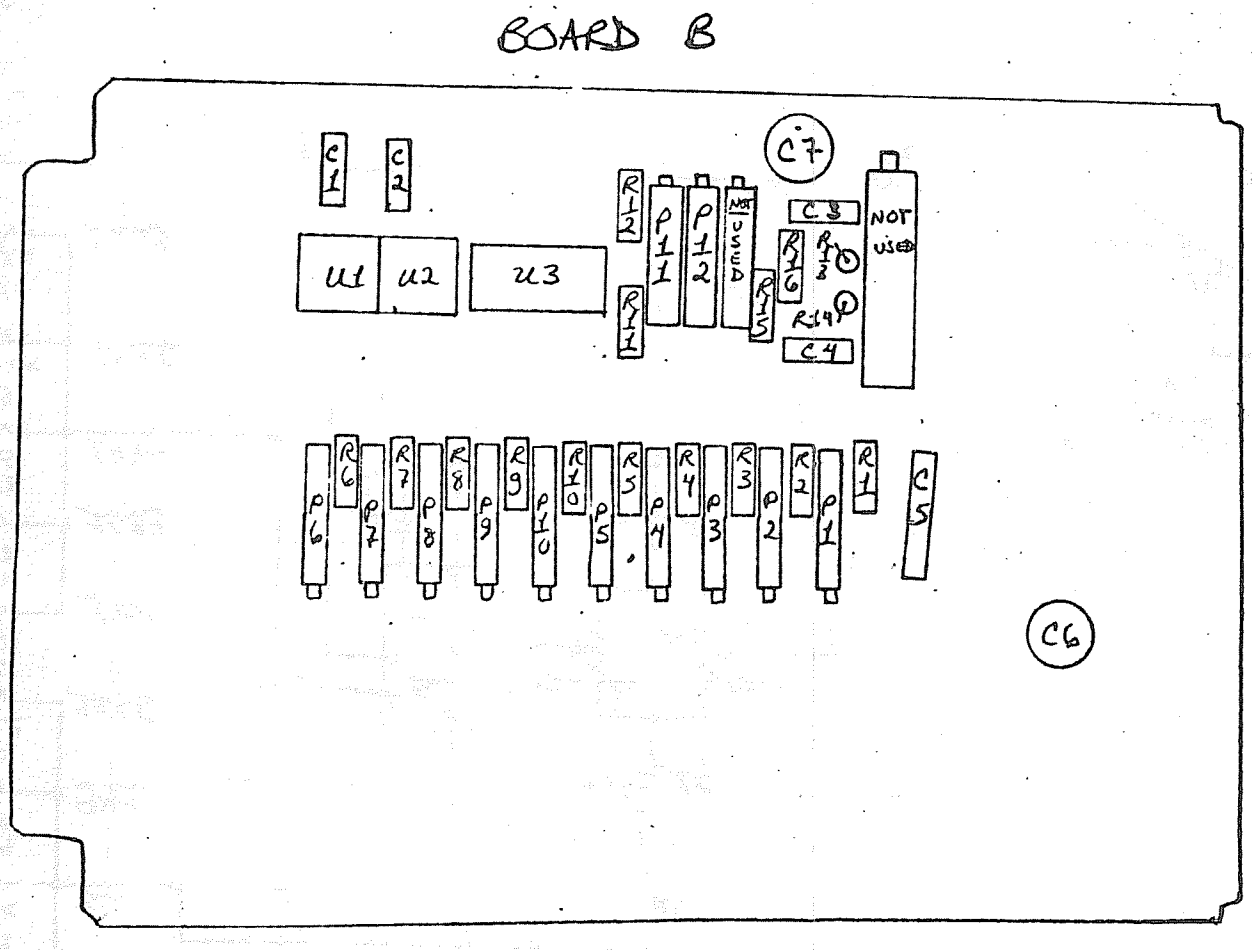

FIGURE 3-11. MODULE B BOARD LAYOUT

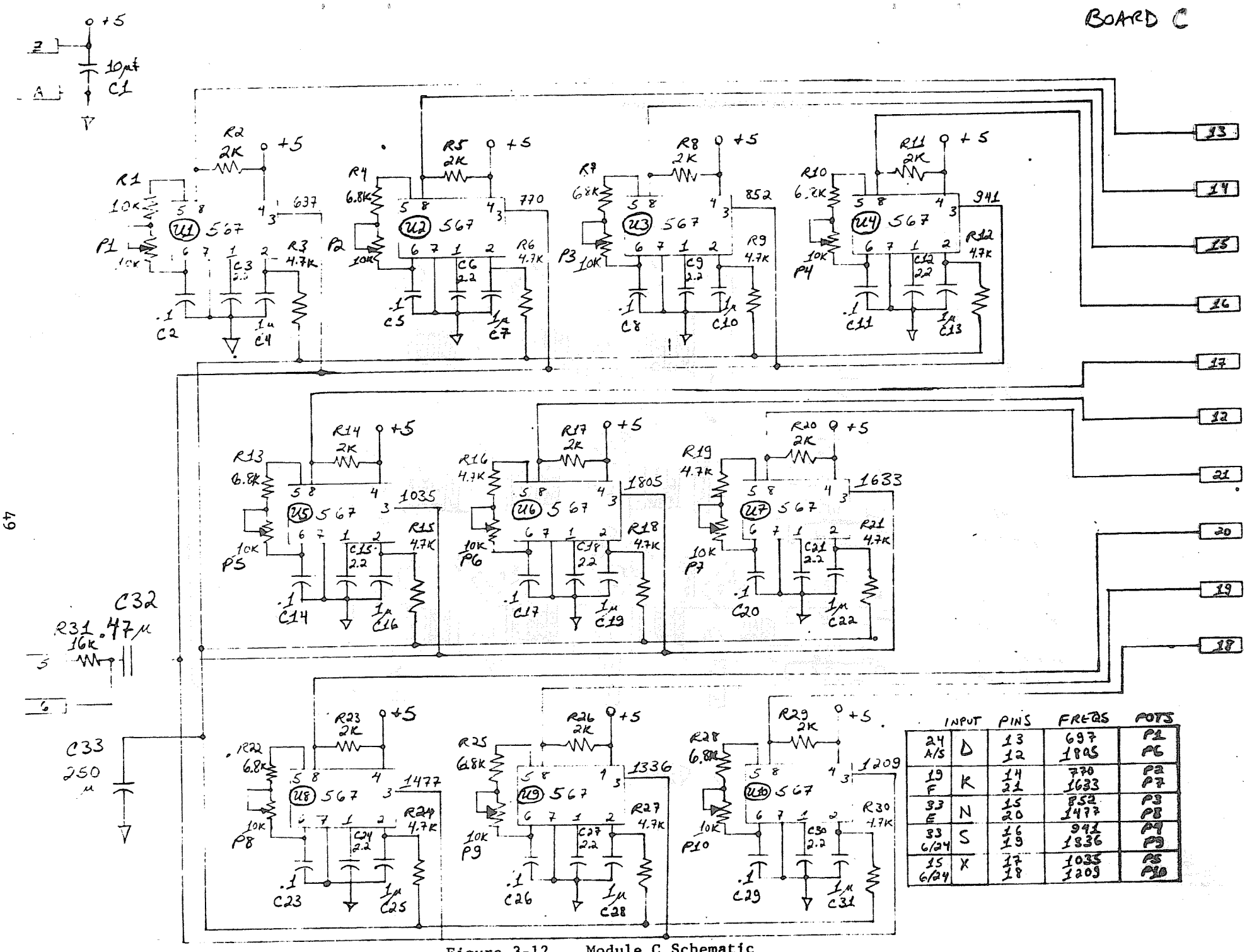

	INPUT	PINS	FREQS	POTS
24 A/S	D	13 12	697 1805	P1 P6
19 F	K	14 21	770 1633	P2 P7
33 E	N	15 20	852 1477	P3 P8
33 6/24	S	16 19	941 1336	P4 P9
15 6/24	X	17 18	1035 1209	P5 P10

Figure 3-12 Module C Schematic

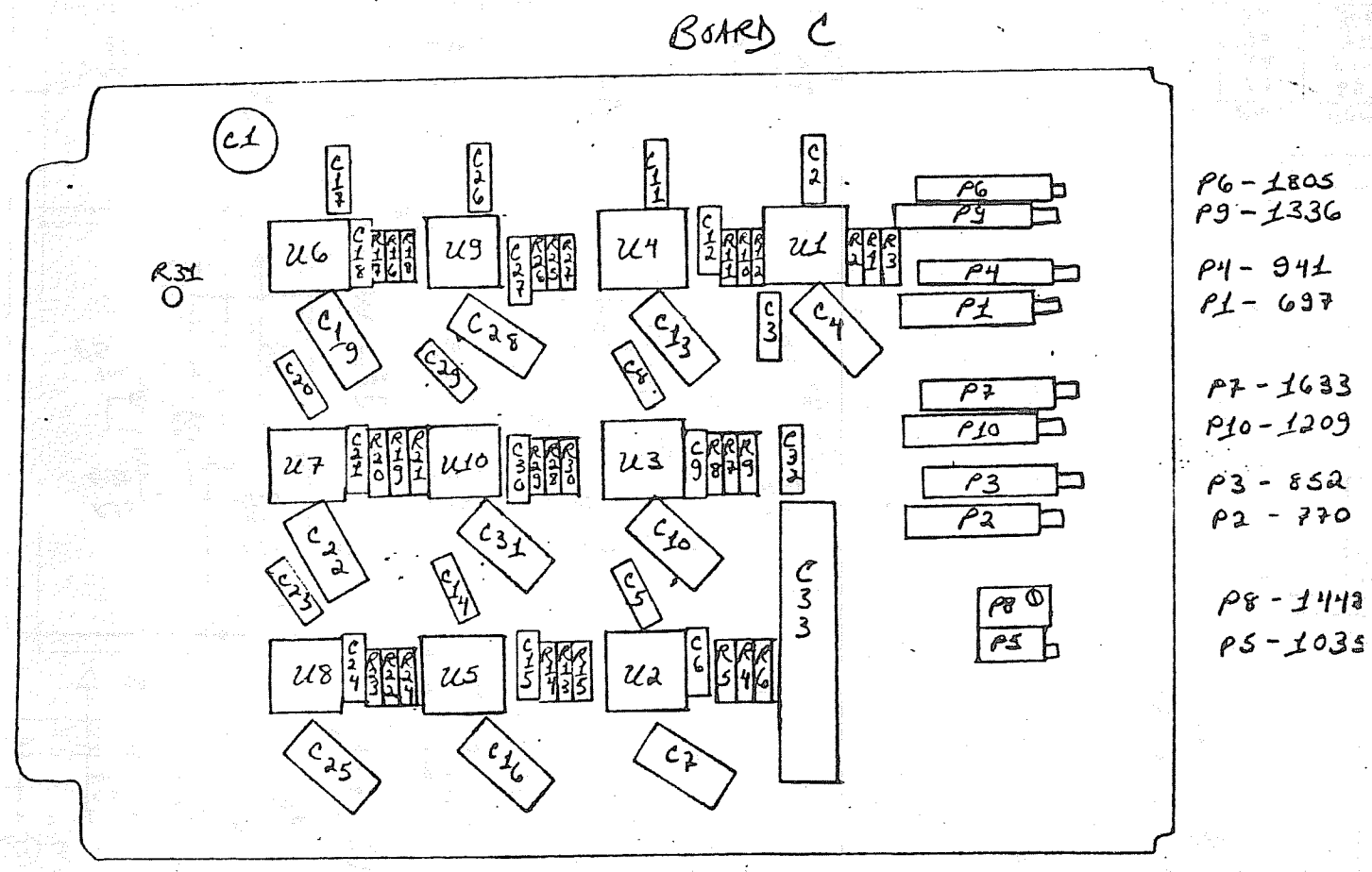

FIGURE 3-13. MODULE C BOARD LAYOUT

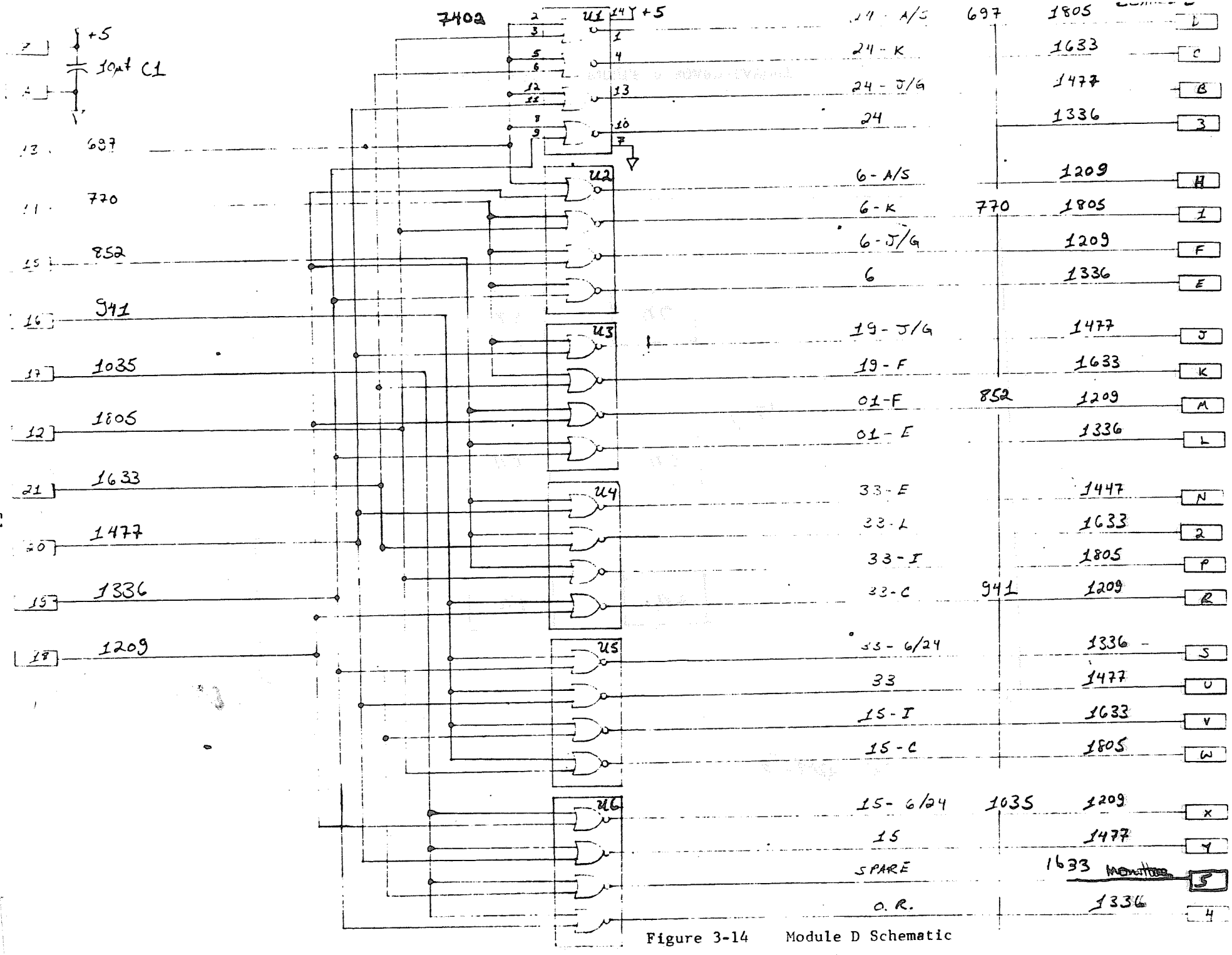

Figure 3-14 Module D Schematic

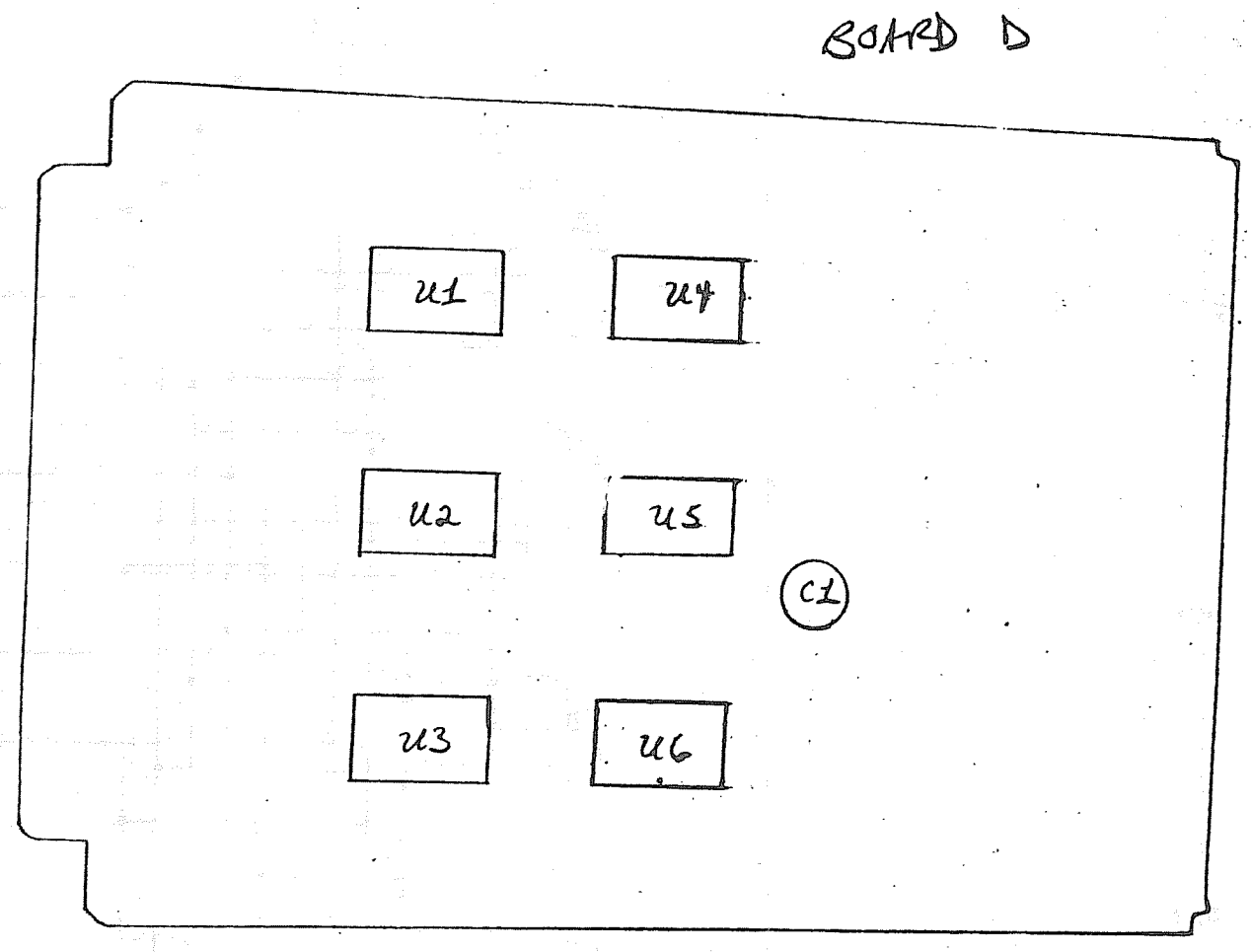

FIGURE 3-15. MODULE D BOARD LAYOUT

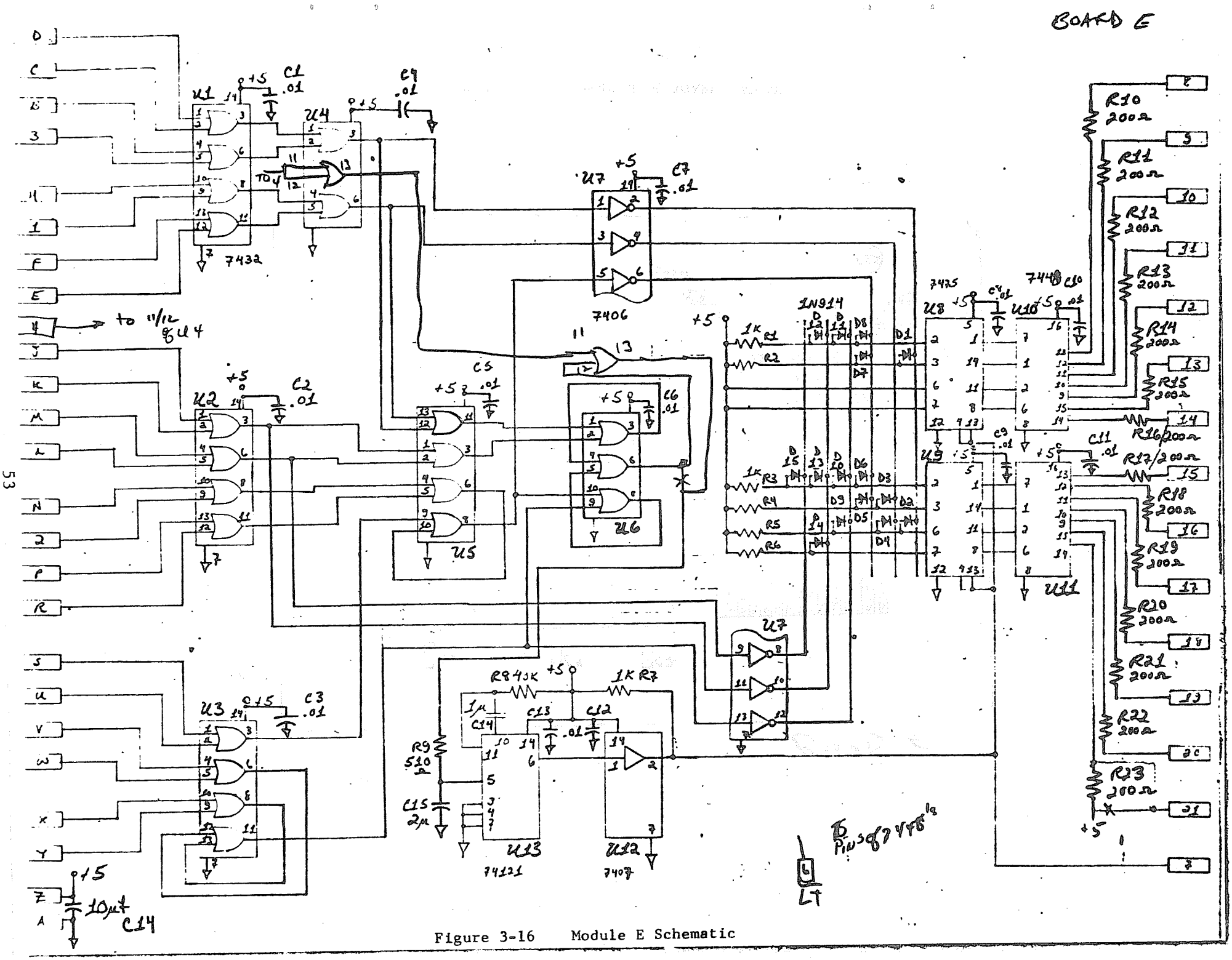

Figure 3-16 Module E Schematic

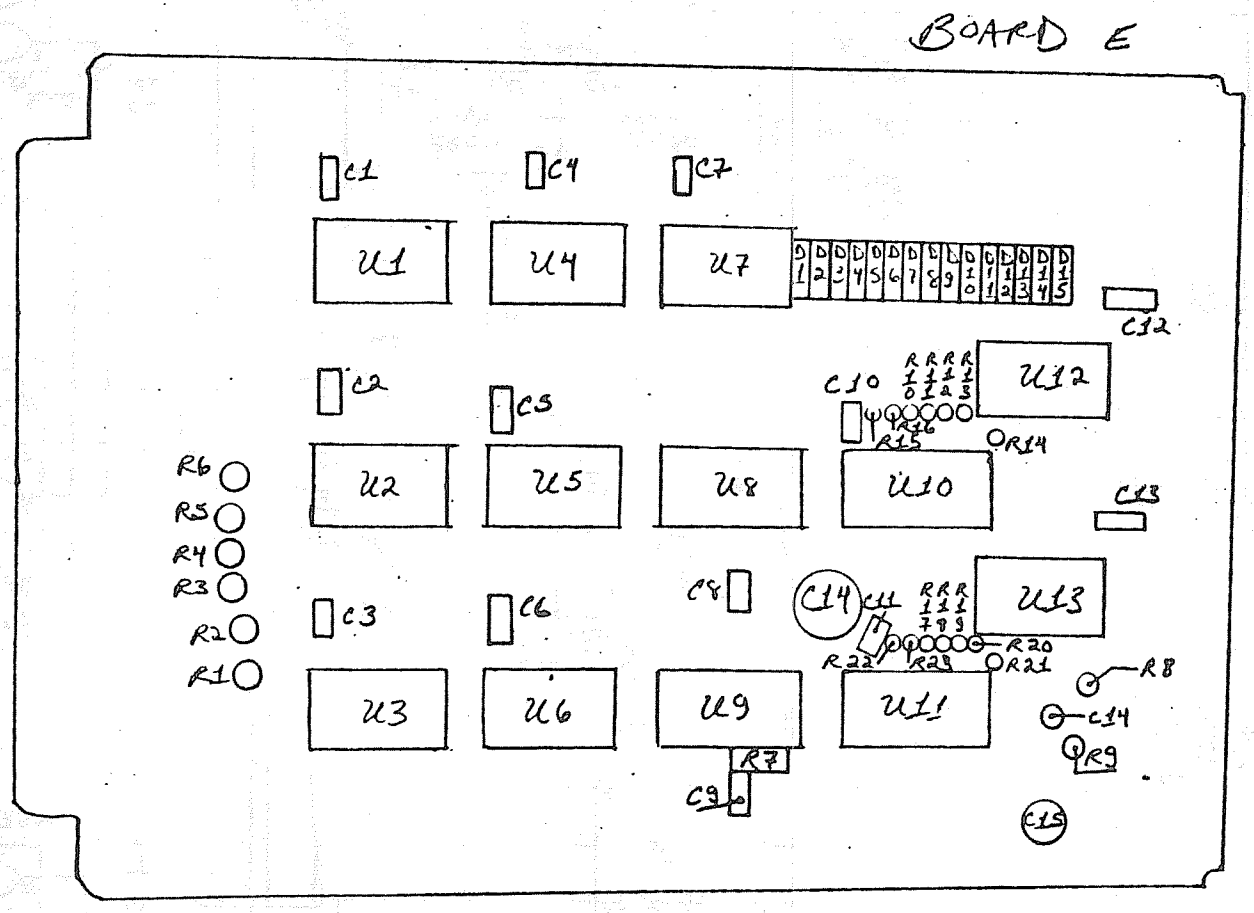

FIGURE 3-17. MODULE E BOARD LAYOUT

Board E/Socket E

from	to	
8	a	1st Digit of Seven Segment 10's
9	b	
10	c	
11	d	
12	e	
13	f	
14	g	
15	a	Second Segment
16	b	
17	c	
18	d	
19	e	
20	f	
21	g	

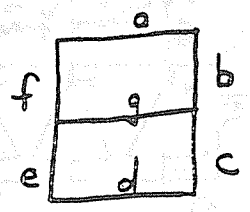

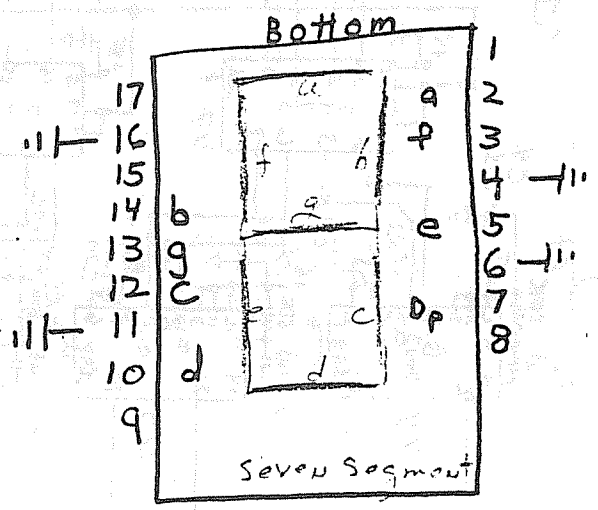

Seven Segment

Pin out

Figure 3-18

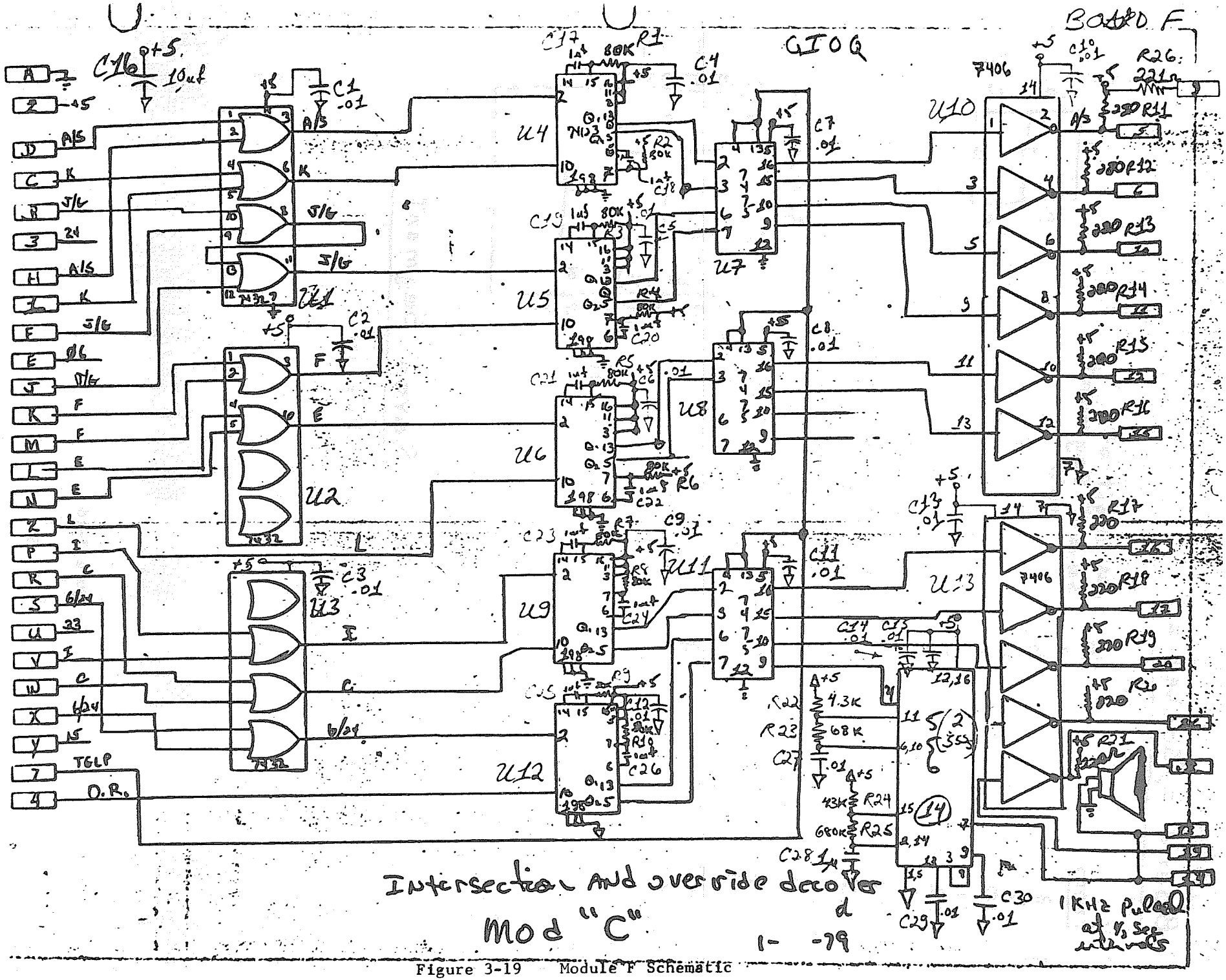

Figure 3-19 Module F Schematic

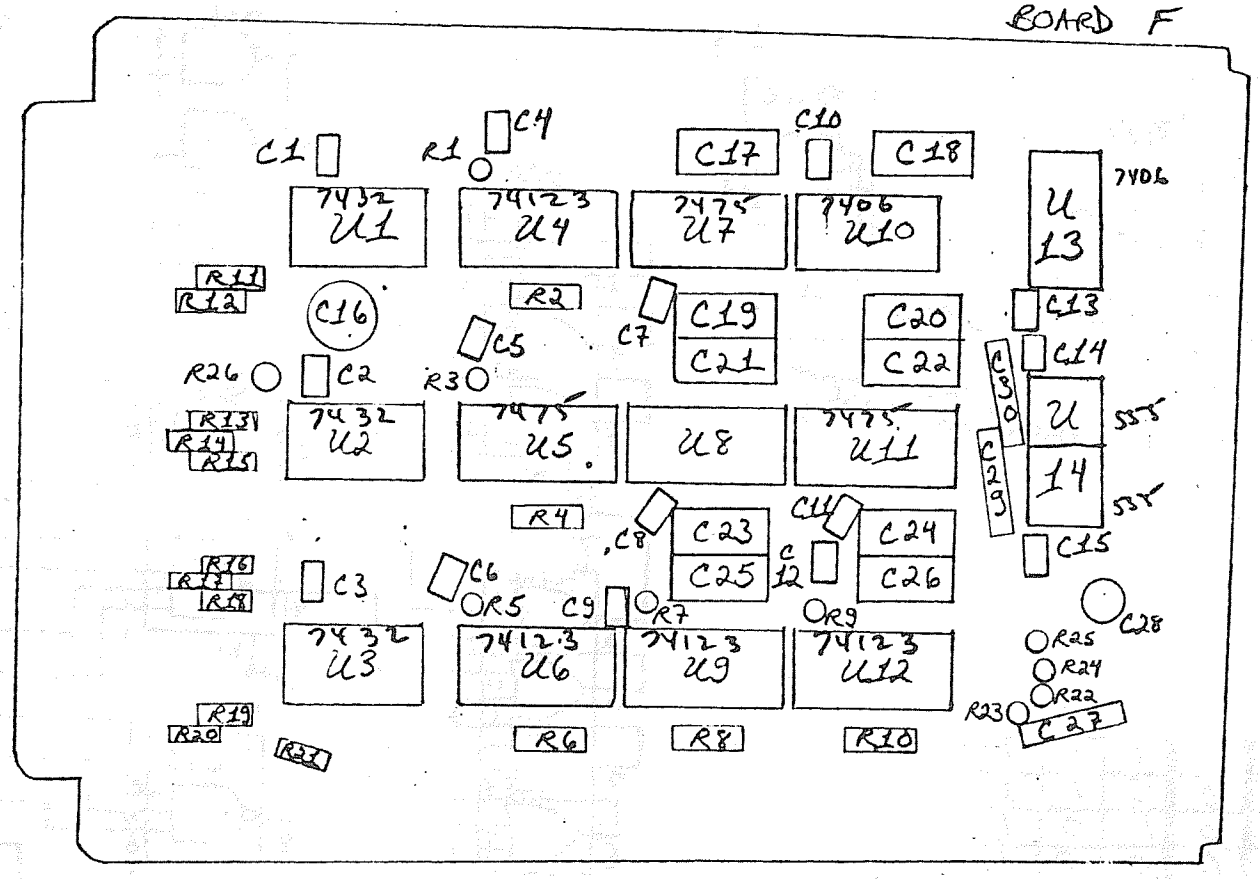

FIGURE 3-20. MODULE F BOARD LAYOUT

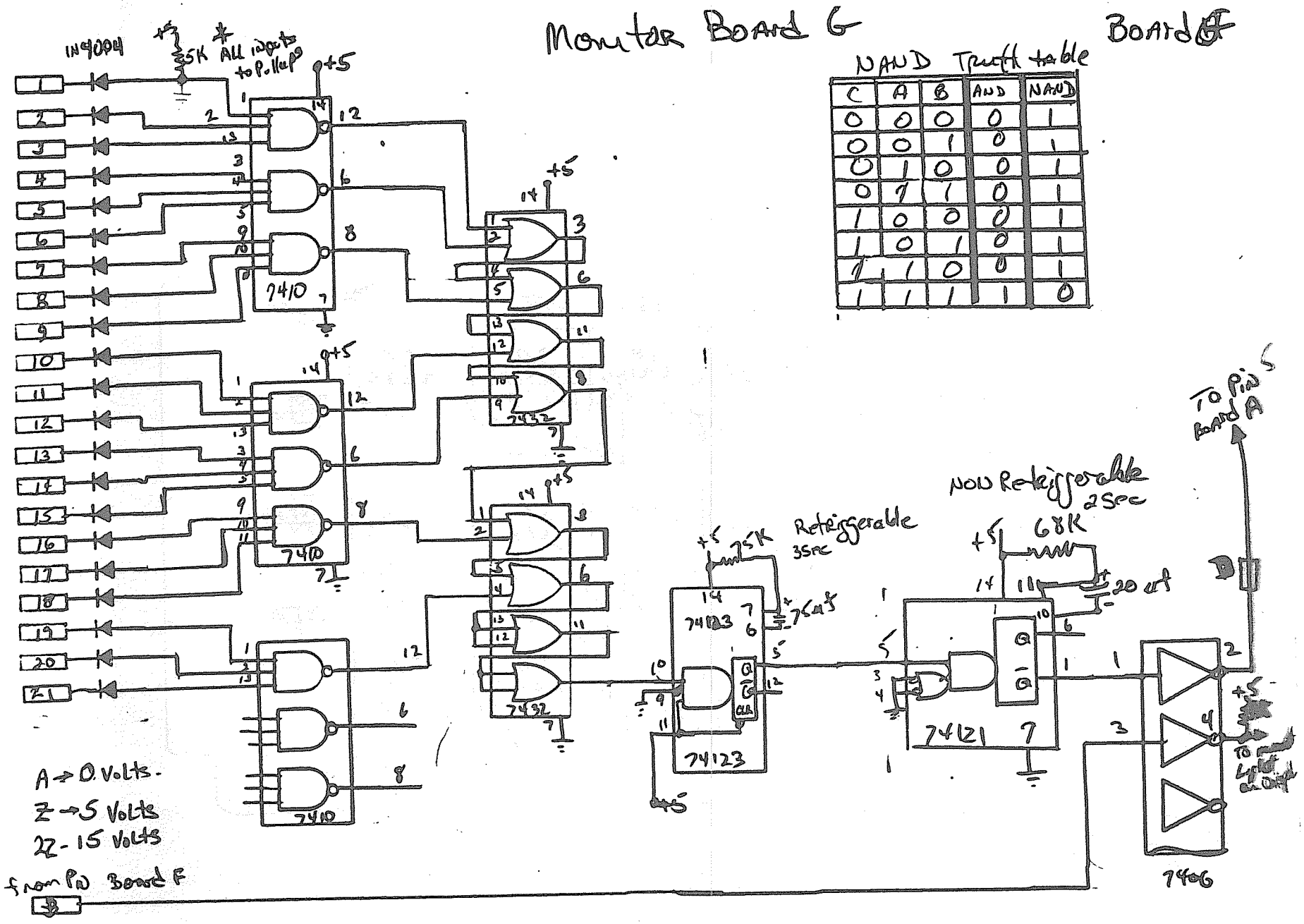

Figure 3-21 Module G Schematic

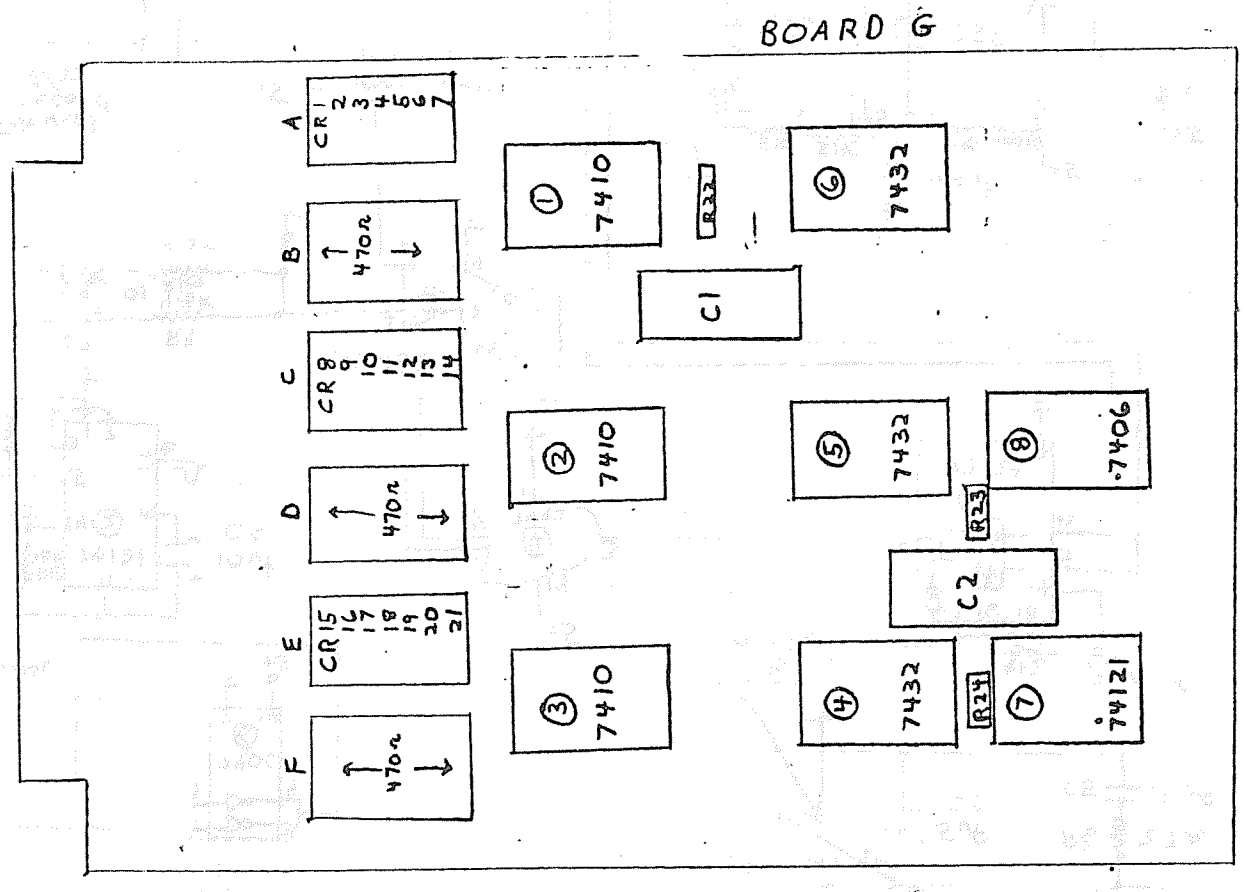

FIGURE 3-22. MODULE G BOARD LAYOUT

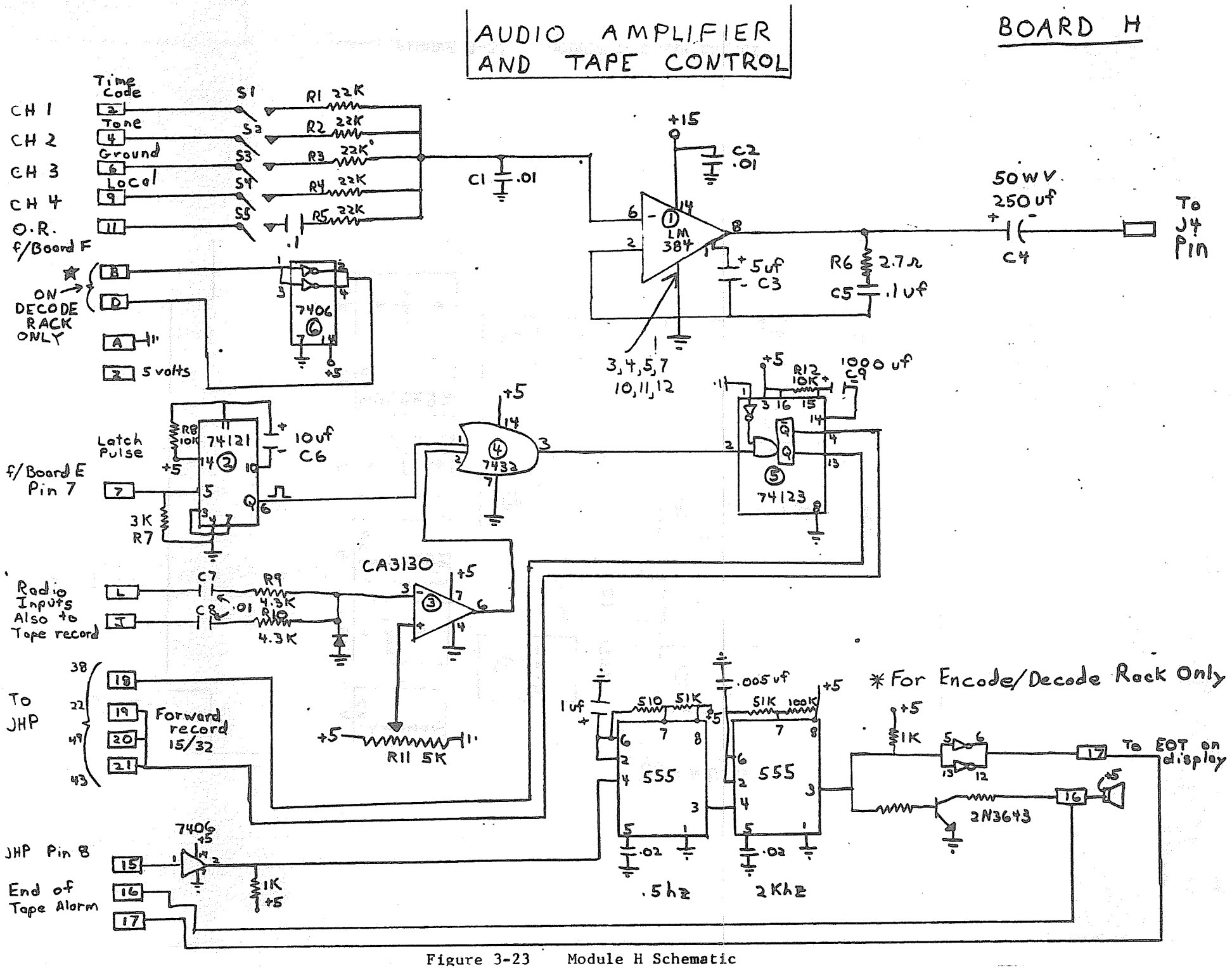

Figure 3-23 Module H Schematic

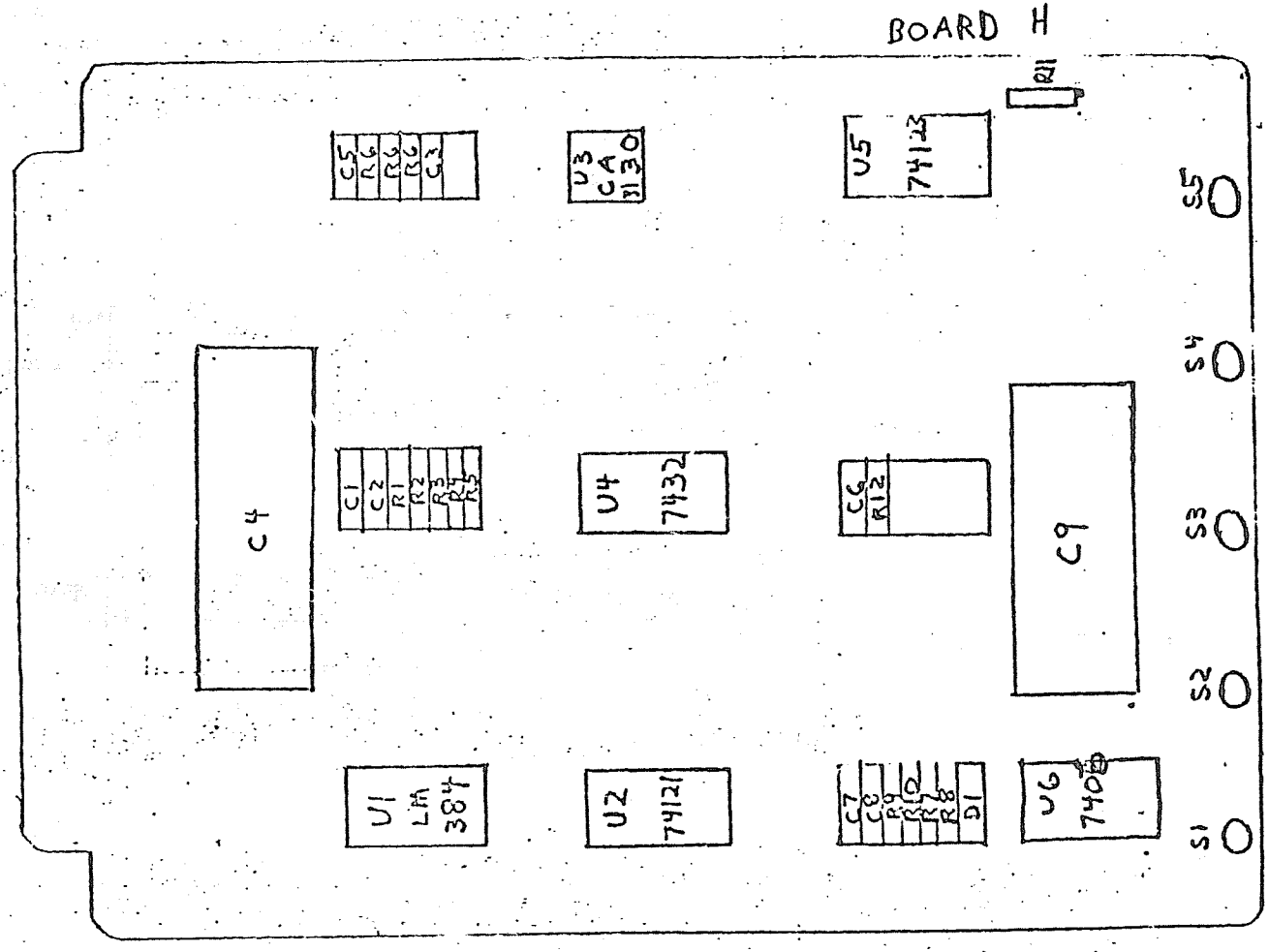

FIGURE 3-24. MODULE H BOARD LAYOUT

V I C O N Maintenance Checklist

Month of _____

(initial in date block when job is completed)

		1	2	3	4	5	6	7	8	9	10	11	12	13	14	15	16	17	18	19	20	21	22	23	24	25	26	27	28	29	30	31	TOTAL
DAILY	Light Clusters																																
	Visual Inspection																																
	Aircraft Detectors																																
	Drive thru check																																
	Data Acq. System																																
	Tape check																																
WEEKLY	Light Clusters																																
	Close visual check																																
	Alignment check																																
	Intensity check																																
	Control Terminals																																
	Parts/Cabinet check																																
	Aircraft Detectors																																
	Damaged parts insp.																																
	Radio Control System																																
	Damaged parts insp.																																
	4th floor VICON equip.																																
	Damaged parts insp.																																
MONTHLY	Control Terminals																																
	Photocell check																																

FAA FORM 1300-10 (3-69)

GENERAL PURPOSE FORM

GPO 871-543

MAINTENANCE OF LIGHT CLUSTERS

An operational check of each light cluster will be made by the Controllers from the Control/Display Panel at least once daily. This will assure operation of the lights on a daily basis. In addition to this check, the following maintenance checks will be made as called out.

Daily: Visual inspection of each light cluster.
Look for broken or damaged parts and replace same. This is to be a drive-by check.

Weekly: Close visual check of each light cluster for any cracked, broken or damaged parts. Inspect each light cluster for cleanliness, obstructions and deterioration of the system.

Alignment check. Check for proper alignment, orientation and aiming of lights. Use ALS Aiming Device AD-1 for vertical angles. (see instructions and figures below).

Light beam #1 should form an angle that is 60° from a line parallel with the runway edge and toward the threshold of that runway. Its vertical angle should be at 12° above the horizon.

Light beam #2 should form an angle that is 30° with the runway edge and have a vertical angle of 6°.

Light beam #3 should point down the runway parallel with the runway edge toward the threshold, and have a 0° vertical angle.

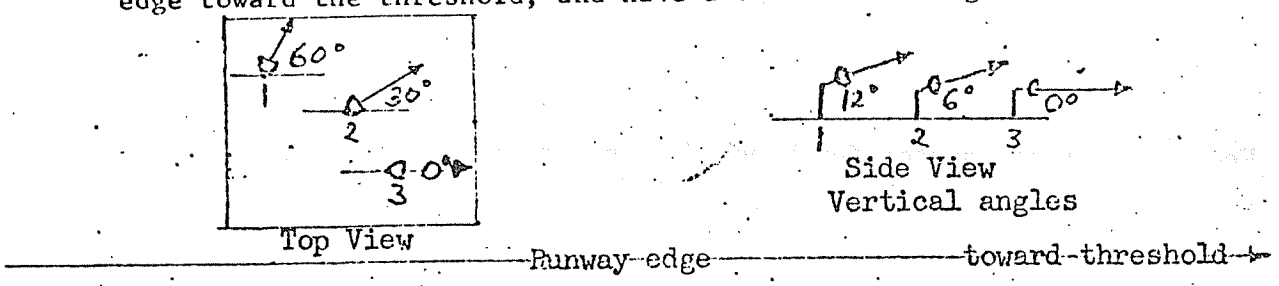

Intensity check. Use a clamp-on ammeter to measure the current in the lamp circuit. The HI position should be between 6.3 and 6.9 amperes and the LO position should be between 5.2 and 5.8 amperes.

Monthly: None

MAINTENANCE OF MICROWAVE AIRCRAFT DETECTORS
(Thresholds of Runways 6, 24, 15 and 33)

Daily: Check for proper operation.
Drive vehicle through beam and check for proper turn off of lights.

Weekly: Inspect system for broken/damaged parts.

Monthly: None.

MAINTENANCE OF RADIO CONTROL SYSTEM

Daily: None (checked by Controllers during their operational check).

Weekly: Inspect system for broken/damaged parts.

Monthly: None

MAINTENANCE OF 4th FLOOR VICON EQUIPMENT
(Control Tower)

Daily: None. (Checked by Controllers during their operational check).

Weekly: Visual check for obvious problems. Inspect for broken/damaged parts. No adjustments are required and replacement of failed components is the only maintenance required.

Monthly: None.

MAINTENANCE OF DATA ACQUISITION SYSTEM
(4th floor of the Control Tower)

Daily: After the initial installation of this equipment, it will be necessary to monitor, on a daily basis, the amount of magnetic tape that is left on the reel and replace it when needed. An audio tone will sound in the Communications Chief's Office when the tape runs out or when the tape is not being properly fed through the system.

A record of the number of counts on the counters on the control panel relay cabinet must be recorded daily and a chart is provided for this purpose.

Weekly: None

Monthly: None

MAINTENANCE OF CONTROL TERMINALS
(Thresholds of runways 6, 24, 15 & 33)
(VICON building)

Daily: None

Weekly: Physical check of each cabinet and parts inside of cabinet for broken or damaged parts. Watch for excessive arcing and other abnormal conditions. Repair/replace damaged parts and make proper notations in 6030-1 log.

Monthly: Verify photo electric control operation.
Cover the light collector cell and allow the unit to operate through its complete cycle.

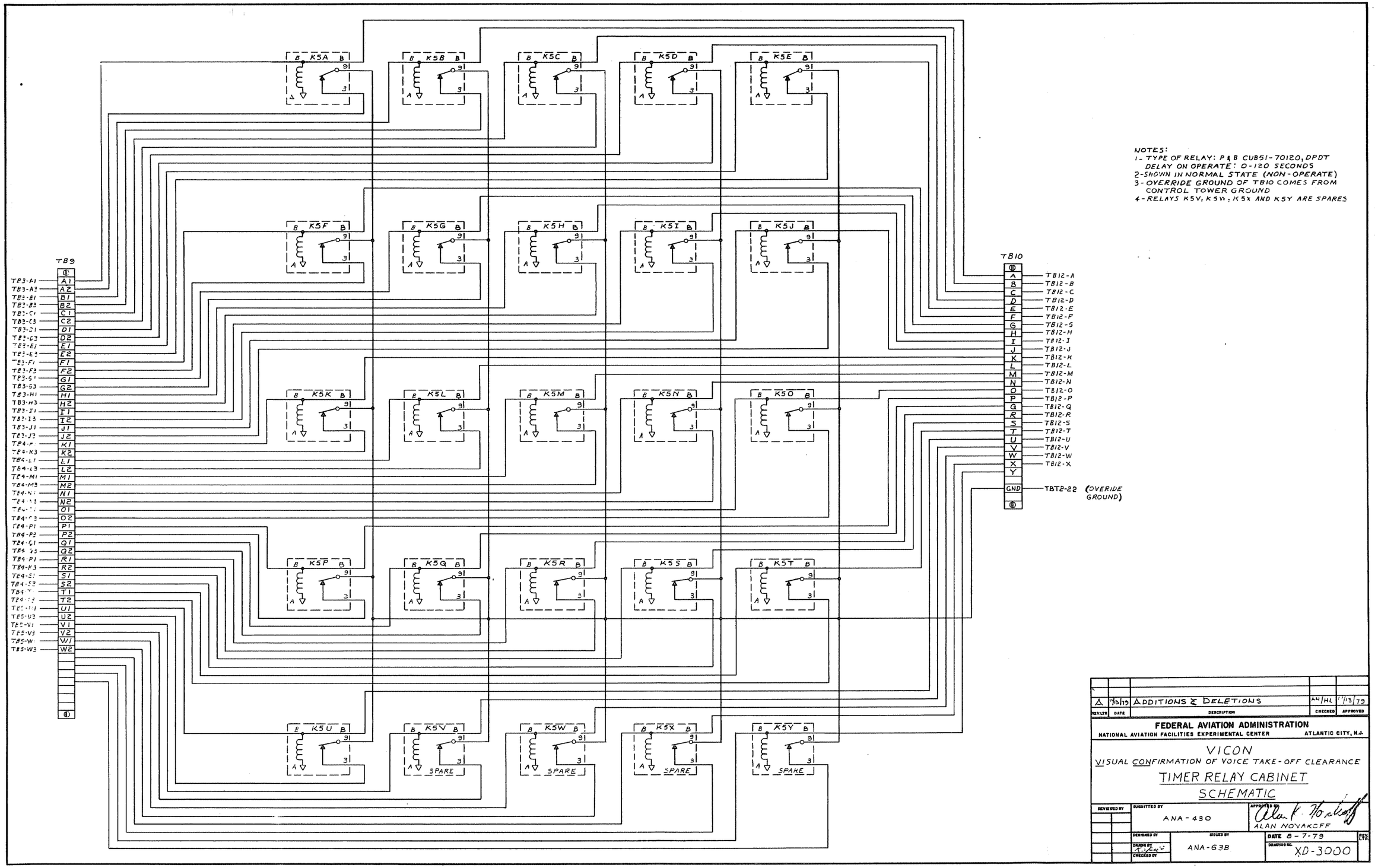
NOTES:
1- TYPE OF RELAY: P & B CUB51-70120, DPDT
DELAY ON OPERATE: 0-120 SECONDS
2-SHOWN IN NORMAL STATE (NON-OPERATE)
3-OVERRIDE GROUND OF TB10 COMES FROM CONTROL TOWER GROUND
4-RELAYS K5V, K5W, K5X AND K5Y ARE SPARES
TB9
TB10
TBT2-22 (OVERIDE GROUND)
SPARE
A 7/13/79 ADDITIONS & DELETIONS AN/HL 7/13/79
REVLTR DATE DESCRIPTION CHECKED APPROVED
FEDERAL AVIATION ADMINISTRATION
NATIONAL AVIATION FACILITIES EXPERIMENTAL CENTER ATLANTIC CITY, N.J.
VICON
VISUAL CONFIRMATION OF VOICE TAKE-OFF CLEARANCE
TIMER RELAY CABINET
SCHEMATIC
REVIEWED BY
SUBMITTED BY
ANA-430
APPROVED BY
ALAN NOVAKOFF
DESIGNED BY
DRAWN BY
CHECKED BY
ISSUED BY
ANA-63B
DATE 8-7-79
DRAWING NO. XD-3000

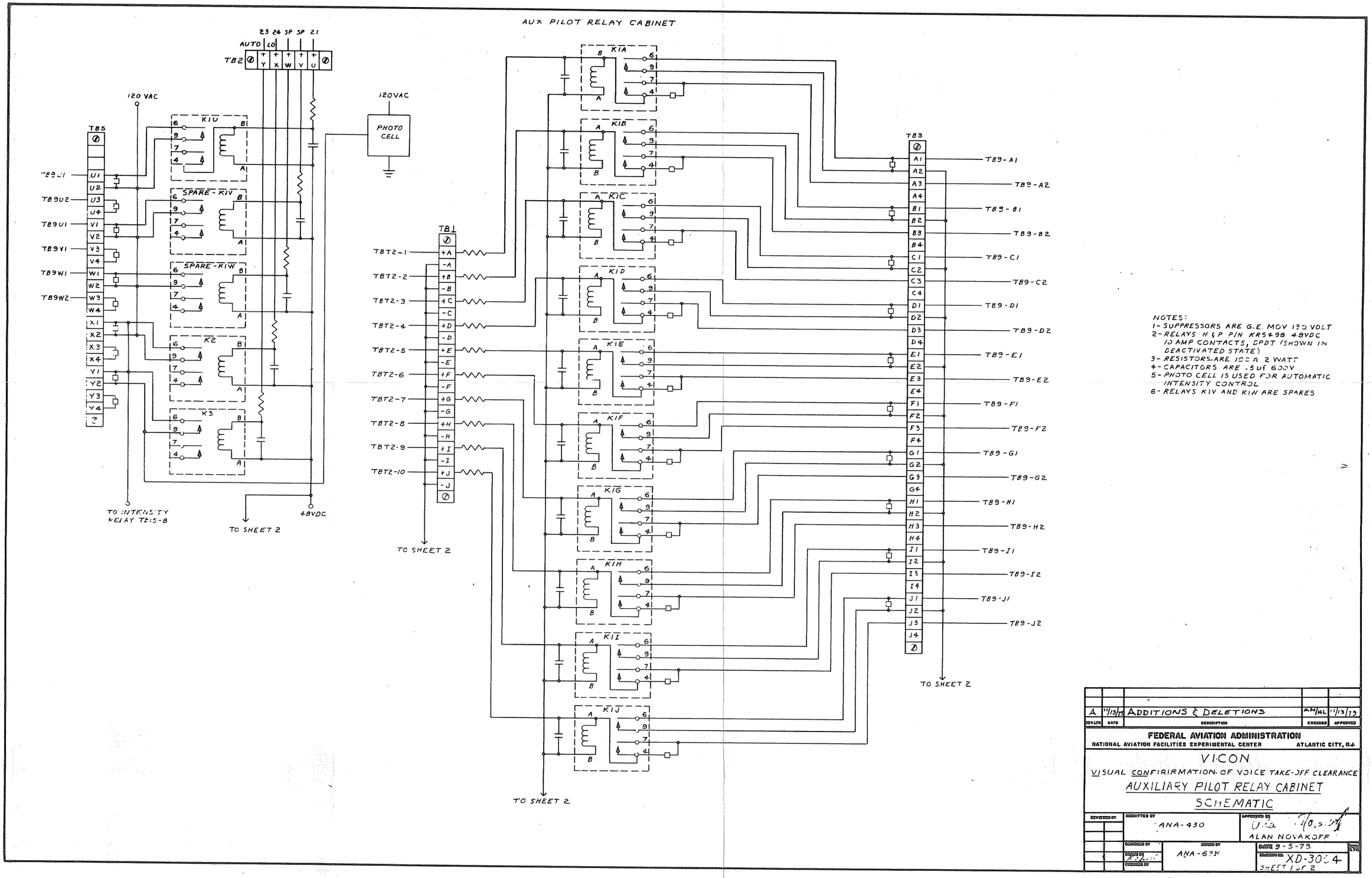
AUX PILOT RELAY CABINET
TB2
AUTO
LO
23 24 SP SP 21
120 VAC
120VAC
PHOTO CELL
TB5
TB9U1
TB9U2
TB9V1
TB9W1
TB9W2
K1U
SPARE-K1V
SPARE-K1W
K2
K3
TO INTENSITY RELAY TB15-8
48VDC
TO SHEET 2
TB1
TB1T2-1
TB1T2-2
TB1T2-3
TB1T2-4
TB1T2-5
TB1T2-6
TB1T2-7
TB1T2-8
TB1T2-9
TB1T2-10
K1A
K1B
K1C
K1D
K1E
K1F
K1G
K1H
K1I
K1J
TB3
TB9-A1
TB9-A2
TB9-B1
TB9-B2
TB9-C1
TB9-C2
TB9-D1
TB9-D2
TB9-E1
TB9-E2
TB9-F1
TB9-F2
TB9-G1
TB9-G2
TB9-H1
TB9-H2
TB9-I1
TB9-I2
TB9-J1
TB9-J2
NOTES:
1- SUPPRESSORS ARE G.E. MOV 130 VOLT
2- RELAYS H & P P/N KR5498 48VDC 10 AMP CONTACTS, DPDT (SHOWN IN DEACTIVATED STATE)
3- RESISTORS ARE 100 Ω 2 WATT
4- CAPACITORS ARE .5 uf 600V
5- PHOTO CELL IS USED FOR AUTOMATIC INTENSITY CONTROL
6- RELAYS K1V AND K1W ARE SPARES
A 11/13/79 ADDITIONS & DELETIONS AN/HL 11/13/79
REVISED DATE DESCRIPTION CHECKED APPROVED
FEDERAL AVIATION ADMINISTRATION
NATIONAL AVIATION FACILITIES EXPERIMENTAL CENTER ATLANTIC CITY, N.J.
VICON
VISUAL CONFIRIRMATION OF VOICE TAKE-OFF CLEARANCE
AUXILIARY PILOT RELAY CABINET
SCHEMATIC
ANA-430
ALAN NOVAKOFF
ANA-630
DATE 9-5-79
XD-3014
SHEET 1 OF 2

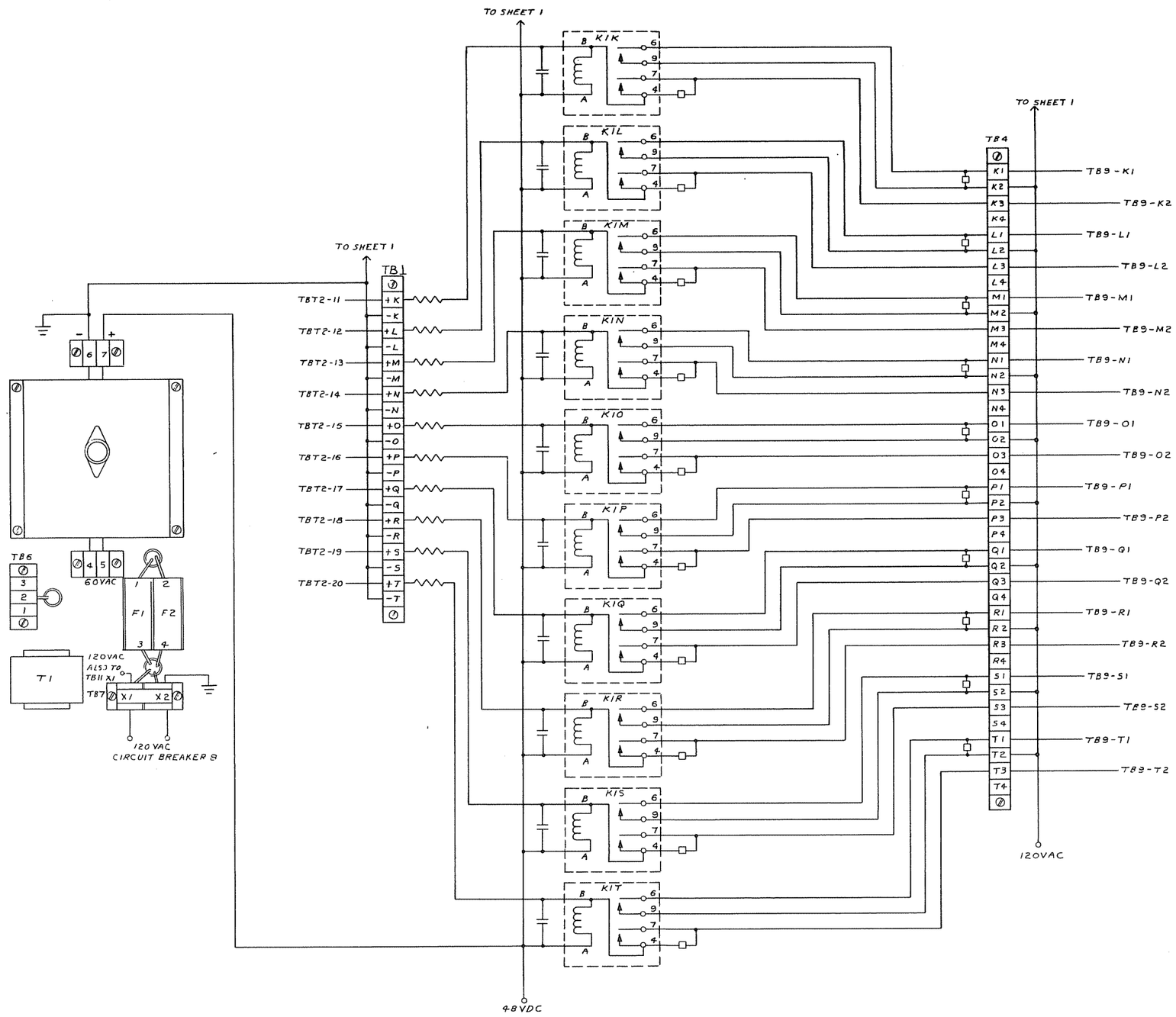

REV LTR	DATE	DESCRIPTION	CHECKED	APPROVED
A	11/13/79	ADDITIONS & DELETIONS	ANA/HL	11/13/79

FEDERAL AVIATION ADMINISTRATION

NATIONAL AVIATION FACILITIES EXPERIMENTAL CENTER — ATLANTIC CITY, N.J.

VICON

VISUAL CONFIRMATION OF VOICE TAKE-OFF CLEARANCE

AUXILIARY PILOT RELAY CABINET

SCHEMATIC

REVIEWED BY	SUBMITTED BY: ANA-430	APPROVED BY: Alan V Novakoff — ALAN NOVAKOFF
	DESIGNED BY / DRAWN BY / CHECKED BY	ISSUED BY: ANA-62E
	DATE 9-5-79	DRAWING NO. XD-[illegible] SHEET 2 OF [illegible]

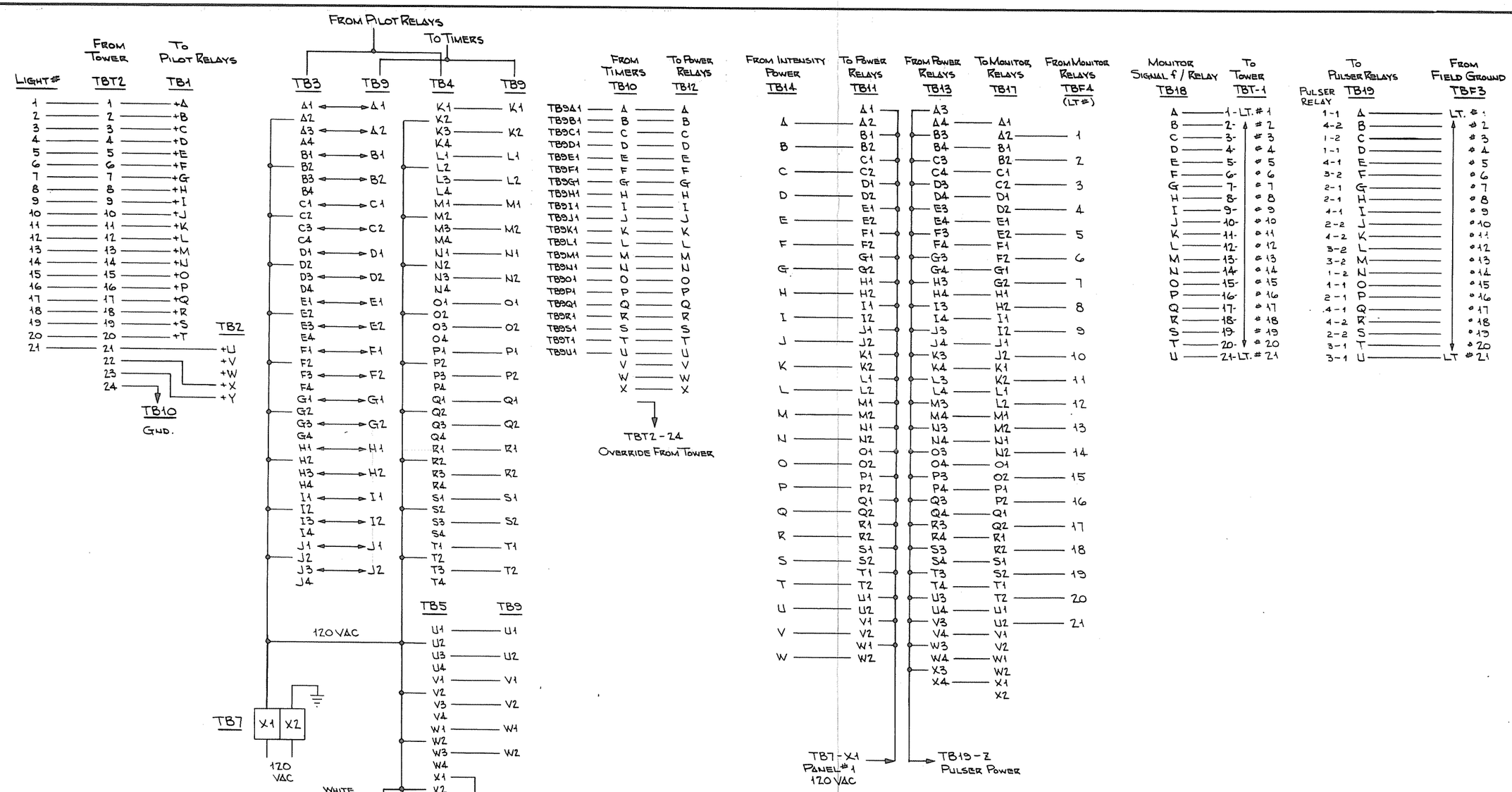

VARIAC	TB17	LIGHT #'s
1	A2, D2, O2	1, 4, 15
2	C2, N2	3, 14
3	G2, H2, R2	7, 8, 16
4	J2, S2, T2, U2	10, 19, 20, 21
5	F2, L2, M2	6, 12, 13
6	E2, I2, Q2	5, 9, 17
7	B2, K2, R2	2, 11, 18,

EXTERNAL WIRING FOR VICON CABINETS

ASR-3 VICON BLDG.

REV. LTR	DATE	DESCRIPTION	CHECKED	APPROVED
A	11/13/79	ADDITIONS & DELETIONS	AN/HL	11-13-79

FEDERAL AVIATION ADMINISTRATION
NATIONAL AVIATION FACILITIES EXPERIMENTAL CENTER — ATLANTIC CITY, N.J.

VICON
VISUAL CONFIRMATION OF VOICE TAKE-OFF CLEARANCE
EXTERNAL WIRING DIAGRAM

REVIEWED BY — SUBMITTED BY: ANA-430 — APPROVED BY: ALAN NOVAKOFF
DESIGNED BY — DRAWN BY: JUZWIAK — CHECKED BY — ISSUED BY: ANA-638 — DATE: 9-7-79 — DRAWING NO.: XD-3005

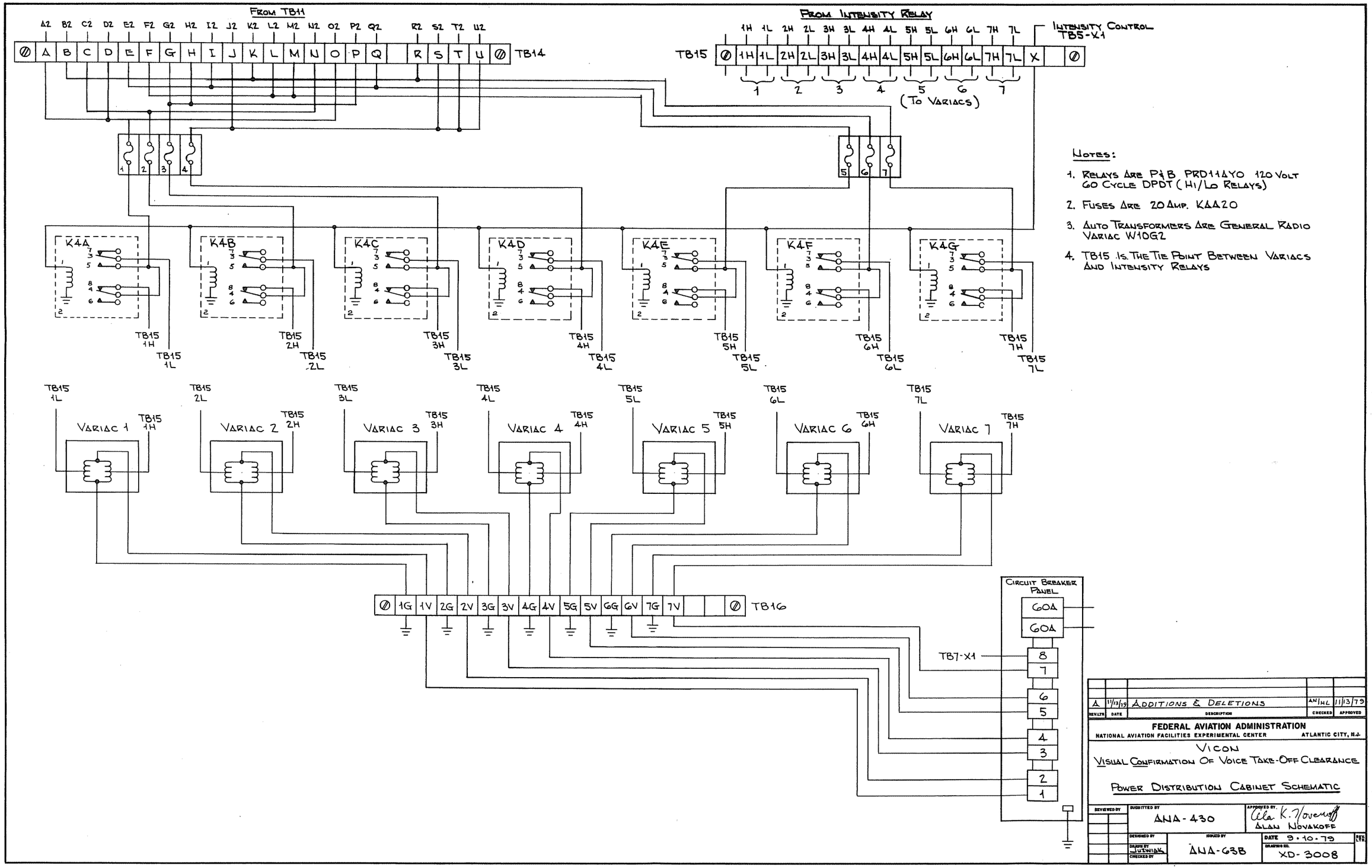
From TB11
A2 B2 C2 D2 E2 F2 G2 H2 I2 J2 K2 L2 M2 N2 O2 P2 Q2 R2 S2 T2 U2
TB14
From Intensity Relay
1H 1L 2H 2L 3H 3L 4H 4L 5H 5L 6H 6L 7H 7L
TB15
Intensity Control TB5-X1
(To Variacs)
K4A
K4B
K4C
K4D
K4E
K4F
K4G
Variac 1
Variac 2
Variac 3
Variac 4
Variac 5
Variac 6
Variac 7
1G 1V 2G 2V 3G 3V 4G 4V 5G 5V 6G 6V 7G 7V
TB16
Circuit Breaker Panel
60A
60A
TB7-X1
Notes:
1. Relays Are P&B PRD11AYO 120 Volt 60 Cycle DPDT (Hi/Lo Relays)
2. Fuses Are 20 Amp. KAA20
3. Auto Transformers Are General Radio Variac W10G2
4. TB15 Is The Tie Point Between Variacs And Intensity Relays
A 11/13/79 Additions & Deletions AN HL 11/13/79
Rev Ltr Date Description Checked Approved
FEDERAL AVIATION ADMINISTRATION
National Aviation Facilities Experimental Center Atlantic City, N.J.
VICON
Visual Confirmation Of Voice Take-Off Clearance
Power Distribution Cabinet Schematic
Reviewed by
Submitted by ANA-430
Approved by Alan Novakoff
Designed by
Drawn by
Checked by
Issued by ANA-63B
Date 9-10-79
Drawing No. XD-3008
Rev Ltr

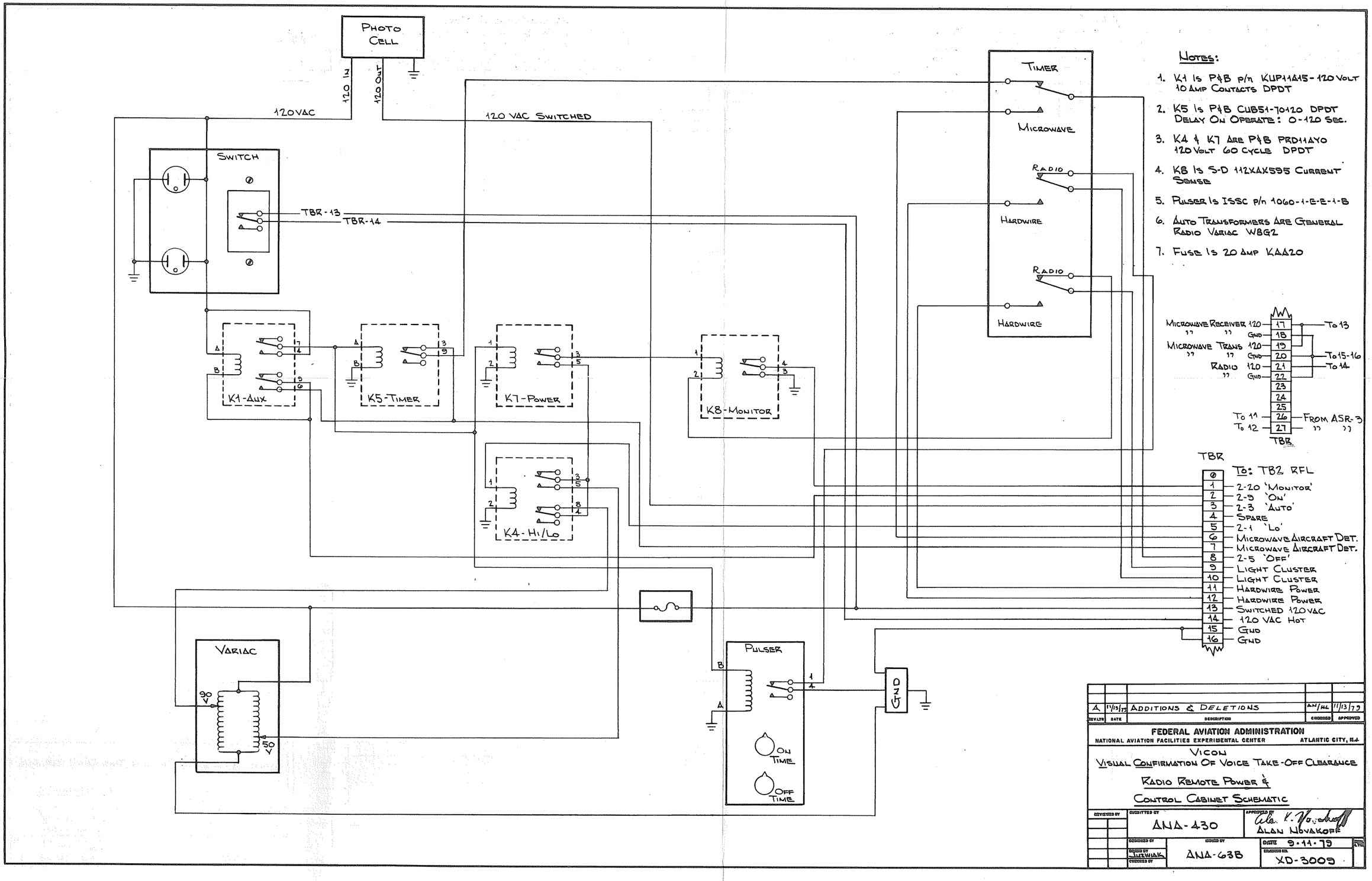
PHOTO CELL
120 IN
120 OUT
120VAC
120 VAC SWITCHED
SWITCH
TBR-13
TBR-14
TIMER
MICROWAVE
RADIO
HARDWIRE
RADIO
HARDWIRE
K1-AUX
K5-TIMER
K7-POWER
K8-MONITOR
K4-HI/LO
VARIAC
90 V
50 V
PULSER
ON TIME
OFF TIME
NOTES:
1. K1 IS P&B P/N KUP11A15-120 VOLT 10 AMP CONTACTS DPDT
2. K5 IS P&B CUB51-70120 DPDT DELAY ON OPERATE: 0-120 SEC.
3. K4 & K7 ARE P&B PRD11AY0 120 VOLT 60 CYCLE DPDT
4. K8 IS S-D 112XAX595 CURRENT SENSE
5. PULSER IS ISSC P/N 1060-1-E-E-1-B
6. AUTO TRANSFORMERS ARE GENERAL RADIO VARIAC WBG2
7. FUSE IS 20 AMP KAA20
MICROWAVE RECEIVER 120 — 17 — TO 13
" " GND — 18
MICROWAVE TRANS 120 — 19
" " GND — 20 — TO 15-16
RADIO 120 — 21 — TO 14
" GND — 22
23
24
25
TO 11 — 26 — FROM ASR-3
TO 12 — 27 — " "
TBR
TBR
TO: TB2 RFL
0
1 — 2-20 'MONITOR'
2 — 2-9 'ON'
3 — 2-3 'AUTO'
4 — SPARE
5 — 2-1 'LO'
6 — MICROWAVE AIRCRAFT DET.
7 — MICROWAVE AIRCRAFT DET.
8 — 2-5 'OFF'
9 — LIGHT CLUSTER
10 — LIGHT CLUSTER
11 — HARDWIRE POWER
12 — HARDWIRE POWER
13 — SWITCHED 120VAC
14 — 120 VAC HOT
15 — GND
16 — GND
A 11/13/79 ADDITIONS & DELETIONS AN/HL 11/13/79
REVISION DATE DESCRIPTION CHECKED APPROVED
FEDERAL AVIATION ADMINISTRATION
NATIONAL AVIATION FACILITIES EXPERIMENTAL CENTER ATLANTIC CITY, N.J.
VICON
VISUAL CONFIRMATION OF VOICE TAKE-OFF CLEARANCE
RADIO REMOTE POWER & CONTROL CABINET SCHEMATIC
SUBMITTED BY ANA-430
APPROVED BY ALAN NOVAKOFF
DATE 9-11-79
ANA-63B
XD-3009

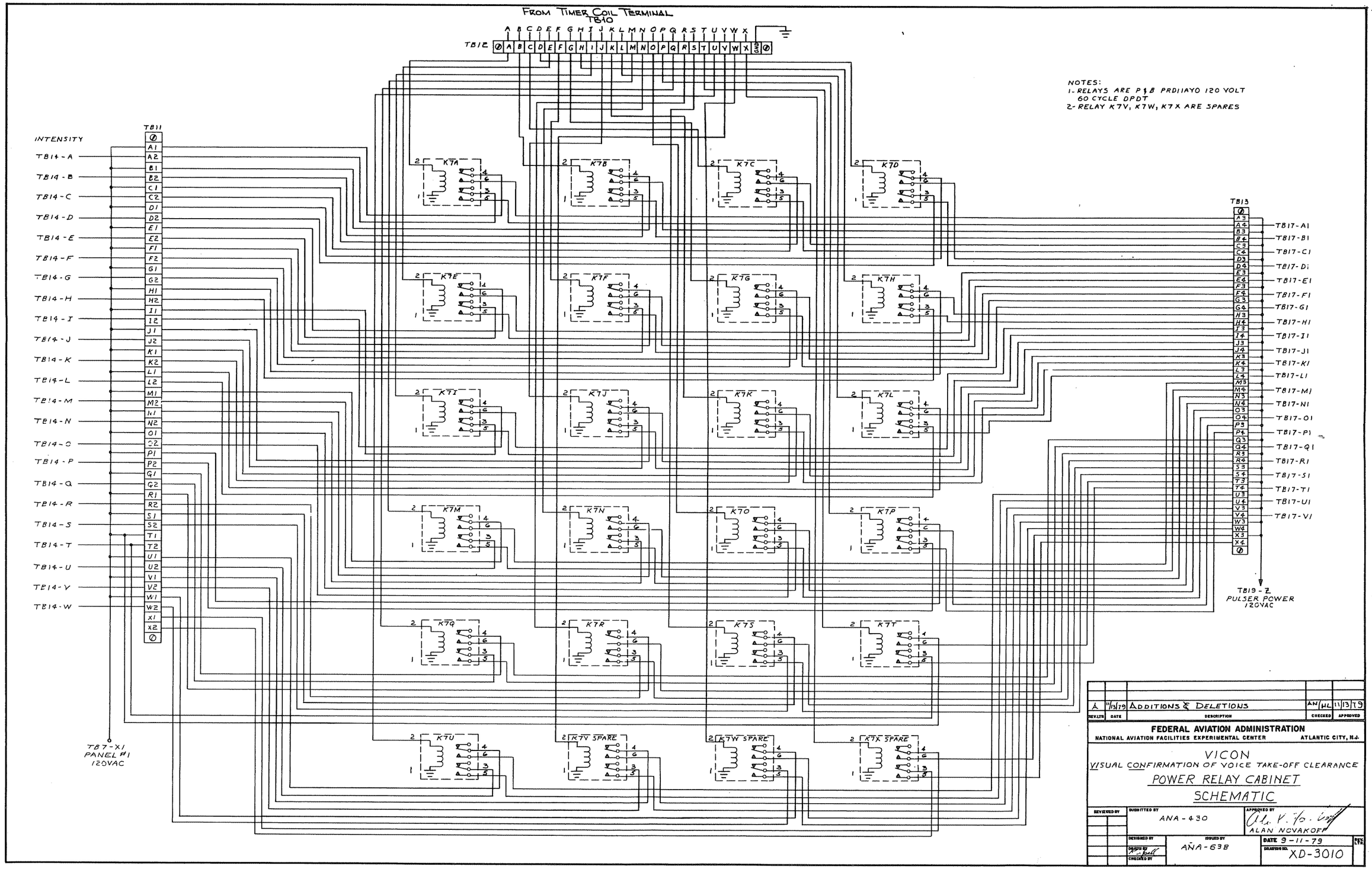
FROM TIMER COIL TERMINAL TB10
TB12
NOTES:
1- RELAYS ARE P&B PRD11AYO 120 VOLT 60 CYCLE DPDT
2- RELAY K7V, K7W, K7X ARE SPARES
INTENSITY
TB11
TB14-A
TB14-B
TB14-C
TB14-D
TB14-E
TB14-F
TB14-G
TB14-H
TB14-I
TB14-J
TB14-K
TB14-L
TB14-M
TB14-N
TB14-O
TB14-P
TB14-Q
TB14-R
TB14-S
TB14-T
TB14-U
TB14-V
TB14-W
TB7-X1
PANEL P1
120VAC
K7A
K7B
K7C
K7D
K7E
K7F
K7G
K7H
K7I
K7J
K7K
K7L
K7M
K7N
K7O
K7P
K7Q
K7R
K7S
K7T
K7U
K7V SPARE
K7W SPARE
K7X SPARE
TB13
TB17-A1
TB17-B1
TB17-C1
TB17-D1
TB17-E1
TB17-F1
TB17-G1
TB17-H1
TB17-I1
TB17-J1
TB17-K1
TB17-L1
TB17-M1
TB17-N1
TB17-O1
TB17-P1
TB17-Q1
TB17-R1
TB17-S1
TB17-T1
TB17-U1
TB17-V1
TB19-Z
PULSER POWER
120VAC
A 11/13/79 ADDITIONS & DELETIONS AN/MLL 11/13/79
REV LTR DATE DESCRIPTION CHECKED APPROVED
FEDERAL AVIATION ADMINISTRATION
NATIONAL AVIATION FACILITIES EXPERIMENTAL CENTER ATLANTIC CITY, N.J.
VICON
VISUAL CONFIRMATION OF VOICE TAKE-OFF CLEARANCE
POWER RELAY CABINET
SCHEMATIC
REVIEWED BY
SUBMITTED BY
ANA-430
APPROVED BY
ALAN NOVAKOFF
DESIGNED BY
DRAWN BY
CHECKED BY
ISSUED BY
ANA-638
DATE 9-11-79
DRAWING NO. XD-3010
REV LTR

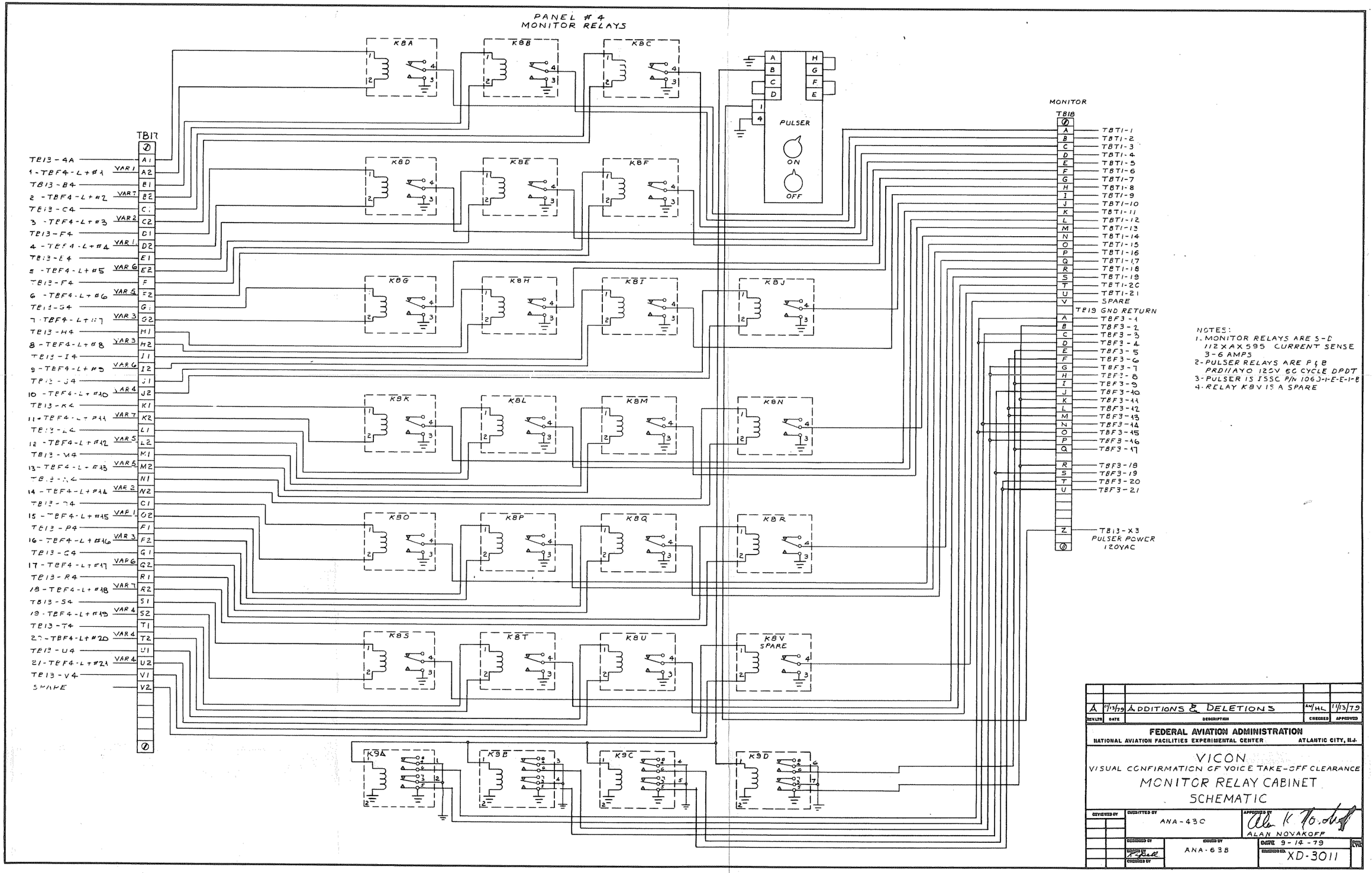
PANEL #4
MONITOR RELAYS
TB17
TB13-4A
1-TBF4-L+#1
TB13-B4
2-TBF4-L+#2
TB13-C4
3-TBF4-L+#3
TB13-F4
4-TBF4-L+#4
TB13-E4
5-TBF4-L+#5
TB13-F4
6-TBF4-L+#6
TB13-G4
7-TBF4-L+#7
TB13-H4
8-TBF4-L+#8
TB13-I4
9-TBF4-L+#9
TB13-J4
10-TBF4-L+#10
TB13-K4
11-TBF4-L+#11
TB13-L4
12-TBF4-L+#12
TB13-M4
13-TBF4-L+#13
TB13-N4
14-TBF4-L+#14
TB13-O4
15-TBF4-L+#15
TB13-P4
16-TBF4-L+#16
TB13-Q4
17-TBF4-L+#17
TB13-R4
18-TBF4-L+#18
TB13-S4
19-TBF4-L+#19
TB13-T4
20-TBF4-L+#20
TB13-U4
21-TBF4-L+#21
TB13-V4
SPARE
PULSER
ON
OFF
MONITOR
TB18
TB13-X3
PULSER POWER
120VAC
TB19 GND RETURN
SPARE
K8V
SPARE
NOTES:
1. MONITOR RELAYS ARE S-D
1/2 X AX 595 CURRENT SENSE
3-6 AMPS
2. PULSER RELAYS ARE P & B
PRD11AYO 120V 60 CYCLE DPDT
3. PULSER IS TSSC P/N 1063-1-E-E-1-B
4. RELAY K8V IS A SPARE
A 11/13/79 ADDITIONS & DELETIONS AW/HL 11/13/79
REV LTR DATE DESCRIPTION CHECKED APPROVED
FEDERAL AVIATION ADMINISTRATION
NATIONAL AVIATION FACILITIES EXPERIMENTAL CENTER ATLANTIC CITY, N.J.
VICON
VISUAL CONFIRMATION OF VOICE TAKE-OFF CLEARANCE
MONITOR RELAY CABINET
SCHEMATIC
DESIGNED BY
SUBMITTED BY
ANA-430
APPROVED BY
ALAN NOVAKOFF
ANA-638
DATE 9-14-79
XD-3011

APPENDIX A

CONTROL TOWER CAB CONTROL PANEL AND INTERFACE EQUIPMENT OPERATION AND MAINTENANCE DESCRIPTION

VISUAL CONFIRMATION OF VOICE TAKEOFF CLEARANCE (VICON)

CONTROL TOWER CAB CONTROL DISPLAY PANEL AND INTERFACE EQUIPMENT OPERATION AND MAINTENANCE DESCRIPTION

By Richard Nelson, ANA-210

A. DISCUSSION

Two control panels were designed and fabricated for the Visual Confirmation of Voice Takeoff Clearance System" (VICON) test at Bradley International Airport. One panel, a "Mimic" panel (Fig. 1) has the light cluster activation switches placed on an airport diagram with the switches located in the approximate position of the departure points. The second, a "Matrix" panel (Fig. 2) has the switches in three rows, each row corresponding to a runway.

The panels will be installed in the console at the Local Control Position in the tower cab. The field interface equipment (power supplies, control relays, timers) will be installed in the lower level equipment room of the tower, Fig. 13.

B. OPERATION

1. Runway Activation Switch

There are six runway activation switches for the three runways. Any of these switches when activated will determine the direction of runway-end and intersection departure points. The upper half legend of these switches are always visible, and are labled for runway ends, ie; 01 ACT, 19 ACT, 24 ACT, etc.

Upon depression of any of these switches, a green striped bar will appear in the lower half. This bar indicates that all light cluster activate switches (runway-end and intersection departure points) associated with this runway are now active.

2. Light Cluster Activate Switch

There are twenty light cluster activate switches corresponding to twenty one field light clusters (Fig. 3). These switches will determine twenty eight departure points depending upon selection of the six runway activation switches. Until depression of a runway activation switch, all of these switches are inactive and will appear dead faced (unlit).

Upon depression of a runway activation switch, an amber legend will appear in the upper half of all light cluster activate switches associated with this runway selection. The legend will label the departure points, ie; 06, ALPHA, SIERRA, etc. This amber legend indicates that particular switch is active and can be used. When any active light cluster activate switch is depressed, the amber will go out and the same legend will appear in green in the lower half. This green legend will be flashing, controlled by the field light cluster which was turned on by the switch.

After time-out of the light cluster the amber legend will return indicating that departure position and switch are ready for use.

3. Override Switch

When depressed, this will reset all field light clusters and interface electronics. It will not reset any individual cluster without resetting all light clusters which are activated.

4. Remote Selectors

The primary and secondary remote selector switches provide an extension of two active runway-end (runway-ends only) departure points, in any combination, ie; Pri. - 01, Sec. - 06 or Pri. 06 Sec. - 01, etc.

After selection of the combination desired, the remote control unit primary and secondary switches will activate these departure points. Override, when using the remote control unit, will have to be accomplished on the control panel.

Note - The same departure points, as programmed on the remote control unit, are also active on the control panel at the same time. Either device can be used to activate the light clusters.

5. Panel Dimmer

Adjusts the intensity of all switch and edge-lighted panel lamps.

6. Light Intensity

Adjusts light intensity of the field light clusters. Auto. position places the field light clusters on photocell control. During days of overcast or fog, control must be switched to manual operation to maintain proper light intensity.

7. Lamp Test

When depressed, will turn on all switch lamps for indication of any failure.

C. TECHNICAL DESCRIPTION

Runway Activation Switches (RAS)	=	S9, S10, S17, S18, S25, S26
Light Cluster Activation Switches (LCAS	=	S1, S2, S3, S4, S5, S6, S7, S8, S11, S12, S13, S14, S15, S16, S19, S20, S21, S22, S23, S24
Lamp Test Switch	=	S28
Override Switch	=	S27
Light Intensity	=	S29
Remote Selector Switch - Primary	=	S30
Remote Selector Switch - Secondary	=	S31

Input Control Relays	=	K2, K4, K6, K8, K10, K12, K14, K16, K18, K20, K22, K24, K26, K28, K30, K32, K34, K36, K38, K40
Time Delay Relays	=	K1, K3, K5, K7, K9, K11, K13, K15, K17, K19, K21, K23, K25, K27, K29, K31, K33, K35, K37, K39
Remote Control Relay - Primary	=	K41
Remote Control Relay - Secondary	=	K42
Counters	=	C1 through C29

Runway Activation Switch (RAS) Figure 4, 5 or 6

A 3-pole double-throw alternate action switch. Ground is hard-wired to N.O. contacts sections B and C. The +12V DC is wired to N.O. contacts section A through override switch.

Upon depression of an RAS, a ground will be placed on the common contact of section A or B of all its associated light cluster activate switches (LCAS). It also supplys the +12V DC lamp voltage for the LCAS (through an input control relay) and turns on the amber legends. A ground for all electrical counters associated with the LCAS is also activated through this SW. The RAS will also will also activate the green bar lamps of itself.

Light Cluster Activate Switch (LCAS) Figure 4, 5 or 6

A 3-pole double-throw momentary action switch. Upon depression of this switch, a ground from N.O. contacts, section A or B will be sent to the field light cluster latch relay, causing field lights to turn on. A set of contacts will momentarily short the control contacts of a time delay relay causing the timer to start.

Lamp Test Switch Figure 9

A 3-pole double-throw momentary action switch. Upon depression, a +12V DC voltage from N.O. contacts section A, is placed on all switch lamps on the panel through isolation diodes.

Override Switch Figure 9

A 3-pole double-throw momentary action switch. Upon depression, the +24V DC coil voltage of all time delay relays will be opened from N.C. contact section A. This will cause all timers to reset. N.C. section B, will interupt the +12V DC lamp voltage to the LCAS.

N.C. section C, will interupt the ground loop to the field, thereby shutting off all light clusters. This sections N.O. contact will place ground on the override electrical counter and advance the count.

Panel Dimmer Figure 9 and 11

5 K Pot. This control is connected to the remote voltage programming terminals of the +12V DC lamp supply. Varriation of this control causes switch and background lamp intensity to change.

Light Intensity Figure 9

A 1-pole, 3-position rotary switch. Any position of this switch will supply ground to field intensity relays to control the light cluster intensity. Auto on this control, places the light clusters on photocell operation.

Remote Selectors Figure 7

A 4-pole, 6-position rotary switch. The 1 through 6 positions of this switch are wired in parallel with all runway end LCAS. The poles are wired to the primary and secondary relay contacts.

When any of the 6 positions is selected, that runway end can be remotely controlled by the primary or secondary switches on the remote control unit, provided that those runway ends have been activated by the depression of a RAS.

Input Control Relay Figure 4, 5, 6 and 8

A 4-pole, double-throw +24V DC relay.

Normal state; (non-energized coil) +12V for associated LCAS amber lamps is connected through N.C. contacts 1 and 9 via N.C. contacts 1 and 4 of time delay. This voltage is only present when appropriate runway activation switch is selected.

Operate state; upon depression of associated LCAS, +24V DC is applied to positive side of coil, via contacts 11 and 9 of time delay relay. At the same time a pulsating ground from the field will be applied to the negative coil. The relay contacts will now open and close at the rate and duty cycle of the field monitor pulse. The green lamps on the LCAS will flash at the same rate through contacts 9 and 5. (amber lamps will not flash because time delay contacts 1 and 4 are now open.)

Contacts 12 and 8 are wired to time delay control contacts, which will retrigger timer every field pulse.

At the end of field pulse duty cycle, relay returns to normal state.

Time Delay Relay Figures 4, 5, 6 and 8

A +24V DC double-pole, double-throw, variable solid state timer. Timer is wired as a retriggerable, one-shot. Coil voltage is always present.

Normal state; Contacts 1 and 4, 8 and 11 are closed. This applies +12V (through contacts 1 and 9 of the input control relay) to the amber lamps of the associated LCAS.

Operate State; Upon depression of associated LCAS control, contacts 5 and 7 are momentarily shorted. This will start timer for predetermined setting of delay. Contacts 11 and 9 will close placing +24V to positive side of input control relay and half step its associated counter. Contacts 1 and 4 will open, removing +12V from amber lamps of LCAS. At this same time a monitor field pulse will activate the input control relay. Contacts 12 and 8 of this relay are wired back to 5 and 7 of T.D. and will extend timer setting until end of monitor field pulse peroid. At end of MFPP timer returns to normal state.

At anytime during operate state, timer can be reset by depressing override switch. This will interupt +24V DC coil voltage.

Electrical Counters Figures 4, 5 and 6

+24V DC 4 Digit, Manual reset.

Each counter ground is wired to its associated runway activation switch. After ground activation, whenever its associated LCAS is depressed, +24V is placed on counter from contacts 11 and 9 of timer. This will half-step the counter. At the end of the timer delay peroid, +24V is removed and causes counter to step compleation and advance one count.

D. CONTROL PANEL TROUBLE-SHOOTING AIDS

LCAS INDICATION	POSSIBLE CAUSE	CHECK STEP
1. When depressed, green legend does not come on (dead faced) and after approx. 3 sec. returns to amber legend.	1a. No Monitor pulse return from field 1b Faulty input control relay	1a. Check for input field monitor pulse on associated ter. strip (fig. 10). With Ohm meter 1X ohms scale, depress LCAS and monitor input with respect to ground. Should be ground for 2.5 secs., open for 1 sec., continuous for approx. 30 sec. 1b. Check input control relay on ter. strip (Fig. 10) Ground input side of coil. Depress test switch on associated time delay relay. Relay panel indicator lamps should activate the green for duration of delay time and then return to amber.
2. When depressed, green legend turns on but immediately returns to amber.	2a. Time delay set too short 2b. Timer control contacts (5 & 7) not being momentarily shorted.	2a. Depress test switch on associated time delay. Monitor timer set lamp on counter panel. Adjust timer control for approx. 3 sec. If lamp does not light, check the +24V DC and timer set lamp. 2b. If all above were ok, monitor control contact inputs on ter. strip (fig. 10). Depress LCAS and check for momentary short. If ok, replace timer.

LCAS INDICATION	POSSIBLE CAUSE	CHECK STEP
3. When depressed, green legend turns on and flashes. Upon end of monitor field pulse peroid, green legend turns off but amber does not come on. (Switch Dead Faced).	3a. Faulty time delay relay. 3b. Timer setting too long.	3a. Repeat step 2a and if necessary step 2b.
4. When depressed switch shows dead face (no green legend) field light cluster has come on. After monitor pulse peroid switch returns to amber legend.	4a. Time delay did start but contacts 11 and 9 did not close	4a. Depress LCAS. Monitor contacts 11 and 9 on associated time delay for closure during delay peroid. (On counter panel, the timer set lamp should turn on). Replace timer.
5. When depressed green and amber legends will alternately switch for length of field monitor pulse.	5a. Time delay did start but contacts 1 and 4 did not open	5a. Replace timer.
6. When depressed all activated lamps on panel dim.	6a. Shorted lamp in switch depressed.	6a. Extract front pushbutton cap. Check for shorted lamp and replace.

E. MAINTENANCE

Maintenance will consist of replacement of failed components as the result of normal life expectancies. No daily checks or adjustments are required.

1. POSSIBLE COMPONENT FAILURES:

VICON CONTROL PANEL - The activation switches on the panel have an electrical life of 25,000 cycles and a mechanical life of 50,000 cycles minimum. No failures are anticipated from these switches.

The lamps of each switch have a rated life of 16,000 hours. In the event of lamp failure, lamps are replaceable from the front-without tools - by extracting the front pushbutton cap.

Edge-light lamps - During the test peroid time, a backup overlay for these panels will be available. If and after replacement the defective lamps in overlay can be replaced by soldering techniques.

Mounted in the box of the panel is a terminal board with 46, IN3613 isolating lamp test diodes. When lamp test is activated, each diode will conduct 80ma DC. Average max. fwd. current of these diodes is 1 amp so no failures are expected.

EQUIPMENT ROOM RELAY RACK

1. Input control relay - check step 1b of trouble-shoot aid list.
2. Time delay relay - check step 2 of trouble-shoot aid list.
3. Electrical - Mechanical Counters - To check, actuate the ground. Depress associated time delay test switch and monitor counter readout for advance.
4. Input Control Relay LED Status Lamps - Plug in replaceable on front relay panel.
5. +12V Reg. Lamp Supply - Operating and Service Manual will be included.

   +24V Relay Supply - Operating and Service Manual will be included.

F. PARTS LIST

1. CONTROL PANEL

a. Vivisun 20/20 sunlight readable switch

b. # 14-112, 12V Switch lamp (T1 flange base)

c. Rotary Switch - Grayhill 44D30-01-2-AJN
Grayhill 44D30-02-2-AJN

d. IN3613 Diode

e. Allen Bradley, 5K 2½ W pot

2. RELAY RACK

a. Input control relay - 24V DC MIDTEX/REMCO 156-14C100

b. Time delay relay - Struthers-Dunn A43-010A, 24V DC, .1-10 Sec.

c. 4 digit counter - Kessler-Ellis # ER-414-01 24V DC

d. LED Indicators - Dialco # 507-4860 Green LED
Dialco # 507-4960 Amber LED

e. Timer set lamp - Sylvania # 24PSB, 24V .073A

f. Lamp supply - Hewlett Packard Model # 6263B 0 - 20V, 0 - 10A

g. Relay supply - Hewlett Packard Model # 62024E 24V 3.75A

h. IN3613 Diode

3. SPARES SUPPLIED

a.	# 14-112, 12V switch lamp	- qty.	12
b.	IN3613 Diode	- qty.	6
c.	4 Digit counter	- qty.	1
d.	Input Control Relay	- qty.	2
e.	Time Delay Relay	- qty.	6
f.	LED Ind. Green	- qty.	6
g.	LED Ind. Amber	- qty.	6
h.	Timer Set Lamp	- qty.	3

APPENDIX A

RELAY CHASSIS TERMINAL WIRE LIST

TB1	FROM	TO	FUNCTION
1	J1-A	K1 - 5	15 Time Delay Start
2	B	K1 - 7	" " " "
3	C	K1 - 2	+24V From Overide
4	D	K1 - 1	Time Delay COM Contact
5	E	K2 - 5	Input Relay N.O. Contact
6	F	K2 - 9	Input Relay COM Contact
7	Light 18 Return	K2 - 13	Input Relay Coil
8	G	K3 - 5	06/15-33 Time Delay Start
9	H	K3 - 7	" " " "
10	J	K3 - 1	Time Delay COM Contact
11	K	K4 - 5	Input Relay N.O. Contact
12	Light 15 & 17 Return	K4 - 13	Input Relay Coil
13	L	K5 - 5	Charlie Time Delay Start
14	M	K5 - 7	" " " "
15	N	K5 - 1	Time Delay COM Contact
16	P	K6 - 5	Input Relay N.O. Contact
17	Light 14 & 16 Return	K6 - 13	Input Relay Coil
18	Q	K7 - 5	India Time Delay Start
19	R	K7 - 7	" " " "
20	S	K7 - 1	Time Delay COM Contact
21	T	K8 - 5	Input Relay N.O. Contact
22	Light 12 & 13 Return	K8 - 13	Input Relay Coil
23	U	K9 - 5	33 Time Delay Start
24	V	K9 - 7	" " " "
25	W	K9 - 1	Time Delay COM Contact
26	X	K10 - 5	Input Relay N.O. Contact
27	Y	K10 - 9	Input Relay COM Contact
28	Light 21 Return	K10 - 13	Input Relay Coil

RELAY CHASIS TERMINAL WIRE LIST

TB2	FROM	TO	FUNCTION
1	J1-Z	K11 - 5	Lima Timer Start
2	a	K11 - 7	" " "
3	b	K11 - 1	Timer COM Contact
4	c	K12 - 5	Input Relay N.O. Contact
5	d	K13 - 5	01/33 Timer Start
6	e	K13 - 7	" " "
7	f	K13 - 1	Timer COM Contact
8	g	K14 - 5	Input Relay N.O. Contact
9	Light 11 Return	K14 - 13	Input Relay Coil
10	h	K15 - 5	Echo/33 Timer Start
11	j	K15 - 7	" " "
12	k	K15 - 1	Timer COM Contact
13	l	K16 - 5	Input Relay N.O. Contact
14	m		Light 18 Out (15 SW)
15	n		Light 17 Out (06/15-33 SW)
16	p		Light 15 Out (06/15-33 SW)
17	r		Light 16 Out (Charlie SW)
18	s		Light 14 Out (Charlie SW)
19	t		Light 12 Out (India SW)
20	u		Light 13 Out (India SW)
21	v		Light 11 Out (Echo 33 + 33/01)
22	w		Light 21 Out (Lima + 33 SW)
23	x		C1 GND (15 SW)
24	y		Light 18 Spare (15 SW)
25	z		" " " "
26	2		C8 GND (33 SW)
27	3		Light 21 Spare (33 SW)
28	4		" " " "

RELAY CHASSIS TERMINAL WIRE LIST

TB3	FROM	TO	FUNCTION
1	J2-A	K17 - 5	19 Timer Delay Start
2	B	K17 - 7	" " " "
3	C	K17 - 1	Timer COM Contact
4	D	K18 - 5	Input Relay N.O. Contact
5	E	K18 - 9	Input Relay COM Contact
6	Light 7 Return	K18 - 13	Input Relay Coil
7	F	K19 - 5	Golf/19 Timer Start
8	G	K19 - 7	" " "
9	H	K19 - 1	Timer COM Contact
10	J	K20 - 5	Input Relay N.O. Contact
11	K	K21 - 5	Charlie Timer Start
12	L	K21 - 7	" " "
13	M	K21 - 1	Timer COM Contact
14	N	K22 - 5	Input Relay N.O. Contact
15	P	K23 - 5	Foxtrot Timer Start
16	Q	K23 - 7	" " "
17	R	K23 - 1	Timer COM Contact
18	S	K24 - 5	Input Relay N.O. Contact
19	Light 8 + 9 Return	K24 - 13	Input Relay Coil
20	T	K25 - 5	01 Timer Start
21	U	K25 - 7	" " "
22	V	K25 - 1	Timer COM Contact
23	W	K26 - 5	Input Relay N.O. Contact
24	Light 10 Return	K26 - 13	Input Relay Coil
25	X	K27 - 5	Echo/01 Timer Start
26	Y	K27 - 7	" " "
27	Z	K27 - 1	Timer COM Contact
28	a	K28 - 5	Input Relay N.O. Contact

RELAY CHASSIS TERMINAL WIRE LIST

TB4	FROM	TO	FUNCTION
1	J2-b	K28 - 9	Input Relay COM Contact
2	c		Light 7 Out (19, Golf/19, Charlie)
3	d		Light 9 Out (Foxtrot)
4	e		Light 8 Out (Foxtrot)
5	f		Light 10 Out (01, Echo/01)
6	g	K41 - 5	PRI. N.O. Contact
7	h	K41 - 9	PRI. COM Contact
8	j	K41 - 8	PRI. N.O. Contact
9	k	K41 - 12	PRI. COM Contact
10	l	K41 - 14	PRI. - Coil
11	+ 24VDC Power Supply	K41 - 13	PRI. + Coil
12	m	K42 - 5	SEC. N.O. Contact
13	n	K42 - 9	SEC. COM Contact
14	p	K42 - 8	SEC N.O. Contact
15	r	K42 - 12	SEC. COM Contact
16	s	K42 - 14	SEC - Coil
17	t	C12	GND (19)
18	u		Light 7 Spare (19)
19	v		Light 7 Spare (19)
20	w	C17	GND (01)
21	x		Light 10 Spare (01)
22	y		Light 10 Spare (01)
23	z		
24	2		
25	3		
26	4		
27	5		
28	6		

RELAY CHASSIS TERMINAL WIRE LIST

TB5	FROM	TO	FUNCTION
1	J3-A	K29 - 5	24 Timer Start
2	B	K29 - 7	" " "
3	C	K29 - 1	Timer COM Contact
4	D	K30 - 5	Input Relay N.O. Contact
5	E	K30 - 9	Input Relay COM Contact
6	Light 20 Return	K30 - 13	Input Relay Coil
7	F	K31 - 5	Golf Timer Start
8	G	K31 - 7	" " "
9	H	K31 - 1	Timer COM Contact
10	J	K32 - 5	Input Relay N.O. Contact
11	Light 5 & 6 Return	K32 - 13	Input Relay Coil
12	K	K33 - 5	Sierra Timer Start
13	L	K33 - 7	" " "
14	M	K33 - 1	Timer COM Contact
15	N	K34 - 5	Input Relay N.O. Contact
16	Light 1 & 2 Return	K34 - 13	Input Relay Coil
17	P	K35 - 5	Alpha Timer Start
18	Q	K35 - 7	" " "
19	R	K35 - 1	Timer COM Contact
20	S	K36 - 5	Input Relay N.O. Contact
21	T	K37 - 5	06 Timer Start
22	U	K37 - 7	" " "
23	V	K37 - 1	Timer COM Contact
24	W	K38- 5	Input Relay N.O. Contact
25	X	K38 - 9	Input Relay COM Contact
26	Light 19 Return	K38 - 13	Input Relay Coil
27	Y	K39 - 5	Kilo Timer Start
28	Z	K39 - 7	" " "

RELAY CHASSIS TERMINAL WIRE LIST

TB6	FROM	TO	FUNCTION
1	J3-a	K39 - 1	Timer COM Contact
2	b	K40 - 5	Input Relay N.O. Contact
3	Light 3 & 4 Return	K40 - 13	Input Relay Coil
4	c		Light 20 Out (24)
5	d		Light 5 Out (Golf)
6	e		Light 6 Out (Golf)
7	f		Light 1 Out (Sierra, Alpha)
8	g		Light 2 Out (Sierra Alpha)
9	h		Light 3 Out (Kilo)
10	j		Light 4 Out (Kilo)
11	k		Light 19 Out (06)
12	l	C29	Overide Counter MOM GND
13	m	A2 + 12VDC P.S.	Program POT (C)
14	n	A2 + 12VDC P.S.	Program POT (W)
15	p	-S + 12VDC P.S.	Program POT (CC)
16	r	Auto	Pos. 1
17	s	HI	Pos. 2
18	t	LO	Pos. 3
19	u	Wiper	COM
20	v	C19	GND (24)
21	w		Light 20 Spare (24)
22	x		Light 20 Spare (24)
23	y	C26	GND (06)
24	z		Light 19 Spare (06)
25	2		Light 19 Spare (06)
26	3		
27	Relay Chassis	TB7 - 2	GND
28	4		

APPENDIX B

SWITCH PANEL CONNECTOR WIRE LIST

J1	TO	FUNCTION
A	S1-B, N.O.	(15) Timer out
B	S1-B, COM.	" " "
C	S27-A, N.C.	(+ 24V From Overide)
D	S1-2	(Amber Lamps)
E	S1-1	(Green Lamps)
F	S9-A, COM.	(15 ACT)
G	S2-C, N.O.	(06/15-33) Timer Out
H	S2-C, COM.	" " "
J	S2-2	(Amber Lamps)
K	S2-1	(Green Lamps)
L	S3-C, N.O.	(Charlie) Timer Out
M	S3-C, COM.	" " "
N	S3-2	(Amber Lamps)
P	S3-1	(Green Lamps)
Q	S4-C, N.O.	(India) Timer Out
R	S4-C, COM.	" " "
S	S4-2	(Amber Lamps)
T	S4-1	(Green Lamps)
U	S8-B, N.O.	(33) Timer Out
V	S8-B, COM.	" " "
W	S8-2	(Amber Lamps)
X	S8-1	(Green Lamps)
Y	S10-A, COM.	(33 ACT)
Z	S7-B, N. O.	(Lima) Timer Out
a	S7-B, COM.	" " "
b	S7-2	(Amber Lamps)
c	S7-1	(Green Lamps)
d	S6-B, N.O.	(01/33) Timer Out
e	S6-B, COM	" " "
f	S6-2	(Amber Lamps)
g	S6-1	(Green Lamps)
h	S5-B, N.O.	(Echo/33) Timer Out
j	S5-B, COM	" " "
k	S5-2	(Amber Lamps)
l	S5-1	(Green Lamps)
m	S1-A, N.O.	(Light 18 Out) (15)
n	S2-B, N.O.	(Light 17 Out) (06/15-33)
p	S2-A, N.O.	(Light 15 Out) (06/15-33)
r	S3-B, N.O.	(Light 16 Out) (Charlie)
s	S3-A, N.O.	(Light 14 Out) (Charlie)
t	S4-B, N.O.	(Light 13 Out) (India)
u	S4-A, N.O.	(Light 12 Out) (India)
v	S5-A, N.O.	(Light 11 Out) (Echo/33)
w	S7-A, N.O.	(Light 21 Out) (Lima)
x	S9-C, COM.	(C1,2,4,6 GND) (15 ACT)

J1	TO	FUNCTION
y	S1-C, COM.	Spare (15)
z	S1-C, N.O.	" (15)
2	S10-C, COM.	(C3,5,7,8,9,10,11 GND) (33 ACT)
3	S8-C, COM.	Spare (33)
4	S8-C, N.O.	" (33)

SWITCH PANEL CONNECTOR WIRE LIST

J2	TO	FUNCTION
A	S11-B, N.O.	(19) Timer Out
B	S11-B, COM.	" " "
C	S11-2	(Amber Lamps)
D	S11-1	(Green Lamps)
E	S17-A, COM.	(19ACT)
F	S12-B, N.O.	(Golf/19) Timer Out
G	S12-B, COM.	" " "
H	S12-2	(Amber Lamps)
J	S12-1	(Green Lamps)
K	S13-B, N.O.	(Charlie) Timer Out
L	S13-B, COM.	" " "
M	S13-2	(Amber Lamps)
N	S13-1	(Green Lamps)
P	S14-C, N.O.	(Foxtrot) Timer Out
Q	S14-C, COM.	" " "
R	S14-2	(Amber Lamps)
S	S14-1	(Green Lamps)
T	S16-B, N.O.	(01) Timer Out
U	S16-B, COM.	" " "
V	S16-2	(Amber Lamps)
W	S16-1	(Green Lamps)
X	S15-B, N.O.	(Echo/01) Timer Out
Y	S15-B, COM.	" " "
Z	S15-2	(Amber Lamps)
a	S15-1	(Green Lamps)
b	S18-A, COM.	(01 ACT)
c	S11-A, N.O.	Light 7 Out (19)
d	S14-A, N.O.	Light 9 Out (Foxtrot)
e	S14-B, N.O.	Light 8 Out (Foxtrot)
f	S15-A, N.O.	Light 10 Out (Echo/01) (01)
g	S30-A, W2	PRI. Remote Relay Contacts
h	S30-A, W1	" " " "
j	S30-B, W1	" " " "
k	S30-B, W2	" " " "
l	J5-1	PRI. Remote Switch
m	S31-A, W2	SEC. Remote Relay Contacts
n	S31-A, W1	" " " "
p	S31-B, W1	" " " "
r	S31-B, W2	" " " "
s	J5-2	SEC. Remote Switch
t	S17-C, COM.	C12, C13, C14, C15, GND. (19 ACT)
u	S11-C, COM.	Light 7 Spare Out (19)
v	S11-C, N.O.	" " " " "
w	S18-C, COM.	C16, C17, C18 GND (01 ACT)
x	S16-C, COM.	Light 10 Spare Out (01)
y	S16-C, N.O.	" " " " "

SWITCH PANEL CONNECTOR WIRE LIST

J3	TO	FUNCTION
A	S19-B, N.O.	(24) Timer Out
B	S19-B, COM.	" " "
C	S19-2	(Amber Lamps)
D	S19-1	(Green Lamps)
E	S25-A, COM.	(24 ACT)
F	S20-C, N.O.	(Golf) Timer Out
G	S20-C, COM.	" " "
H	S20-2	(Amber Lamps)
J	S20-1	(Green Lamps)
K	S21-C, N.O.	(Sierra) Timer Out
L	S21-C, COM.	" " "
M	S21-2	(Amber Lamps)
N	S21-1	(Green Lamps)
P	S22-C, N.O.	(Alpha) Timer Out
Q	S22-C, COM.	" " "
R	S22-2	(Amber Lamps)
S	S22-1	(Green Lamps)
T	S24-B, N.O.	(06) Timer Out
U	S24-B, COM.	" " "
V	S24-2	(Amber Lamps)
W	S24-1	(Green Lamps)
X	S26-A, COM.	(06 ACT)
Y	S23-C, N.O.	(Kilo) Timer Out
Z	S23-C, COM.	" " "
a	S23-2	(Amber Lamps)
b	S23-1	(Green Lamps)
c	S19-A, N.O.	Light 20 Out (24)
d	S20-A, N.O.	Light 5 Out (Golf)
e	S20-B, N.O.	Light 6 Out (Golf)
f	S21-A, N.O.	Light 1 Out (Sierra)
g	S21-B, N.O.	Light 2 Out (Sierra)
h	S23-A, N.O.	Light 3 Out (Kilo)
j	S23-B, N.O.	Light 4 Out (Kilo)
k	S24-A, N.O.	Light 19 Out (06)
l	S27-C, N.O.	Overide Counter GND.
m	Dim Pot - C	Panel Dimmer
n	Dim Pot - W	" "
p	Dim Pot - CC	" "
r	S29-1	Auto
s	S29-2	HI
t	S29-3	LO
u	S29-COM.	
v	S25-C, COM.	C19, 21, 23, 25, 28 GND (24 ACT)
w	S19-C, COM.	Light 20 Spare (24)
x	S19-C, N.O.	" " " "
y	S26-C, COM.	C20, 22, 24, 26, 27 GND (06 ACT)
z	S24-C, COM.	Light 19 Spare (06)
2	S24-C, N.O.	" " " "

SWITCH PANEL CONNECTOR WIRE LIST

J4	TO	FUNCTION
A	S27-A, COM.	+ 24 VDC
B	S27-1,2,3,4 & B COM.	+ 12 VDC
C	S27-C, COM	GND
	S9-B, N.O.	"
	S10-B, N.O.	"
	S17-B, N.O.	"
	S18-B, N.O.	"
	S25-B, N.O.	"
	S26-B, N.O.	"
D	S27-C, N.C.	Overide

J5	TO	FUNCTION
1	J2-1	PRI Relay GND
2	J2-s	SEC Relay GND
3	GND Strap	GND

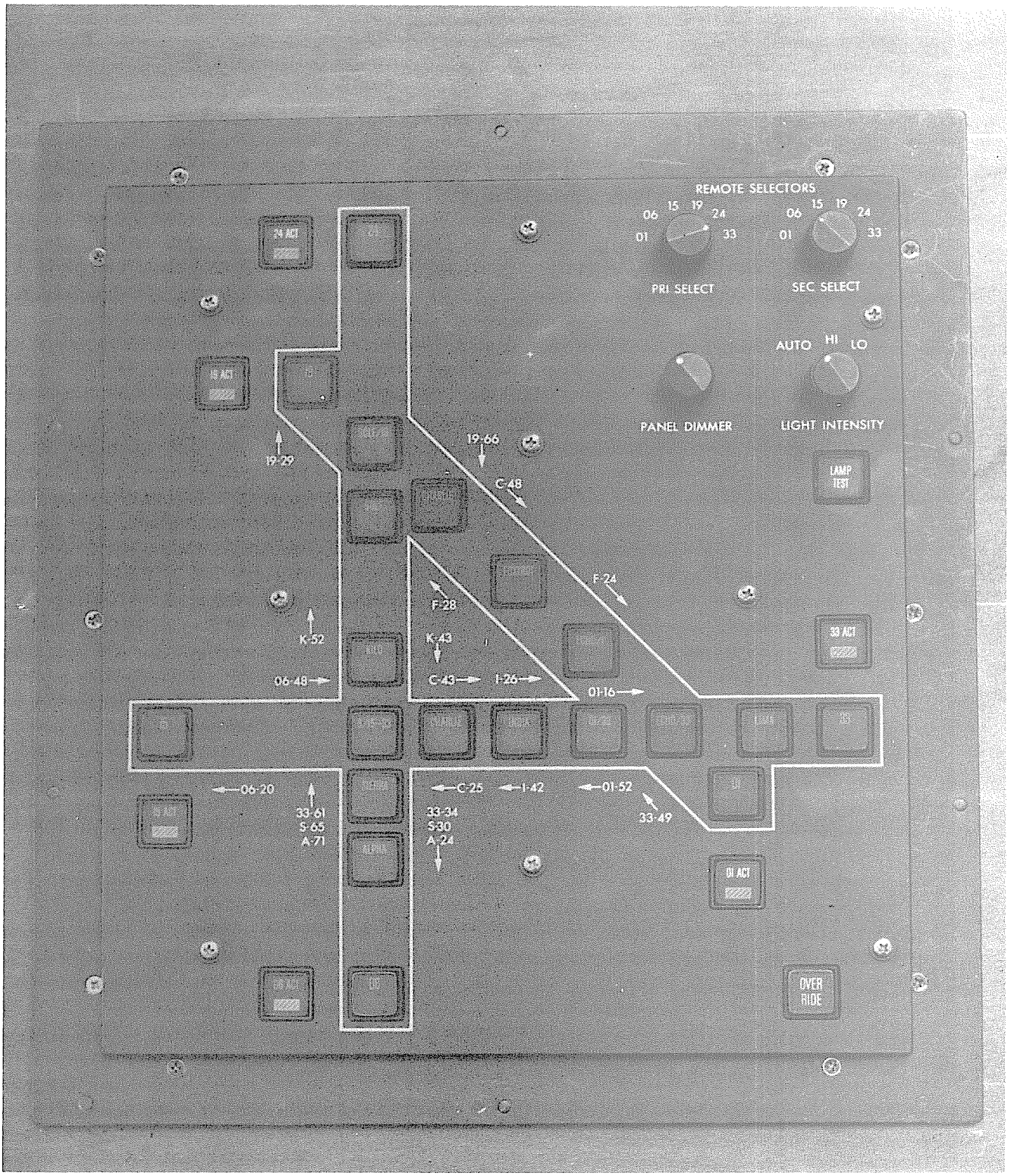

FIGURE A-1. MIMIC VICON CONTROL PANEL

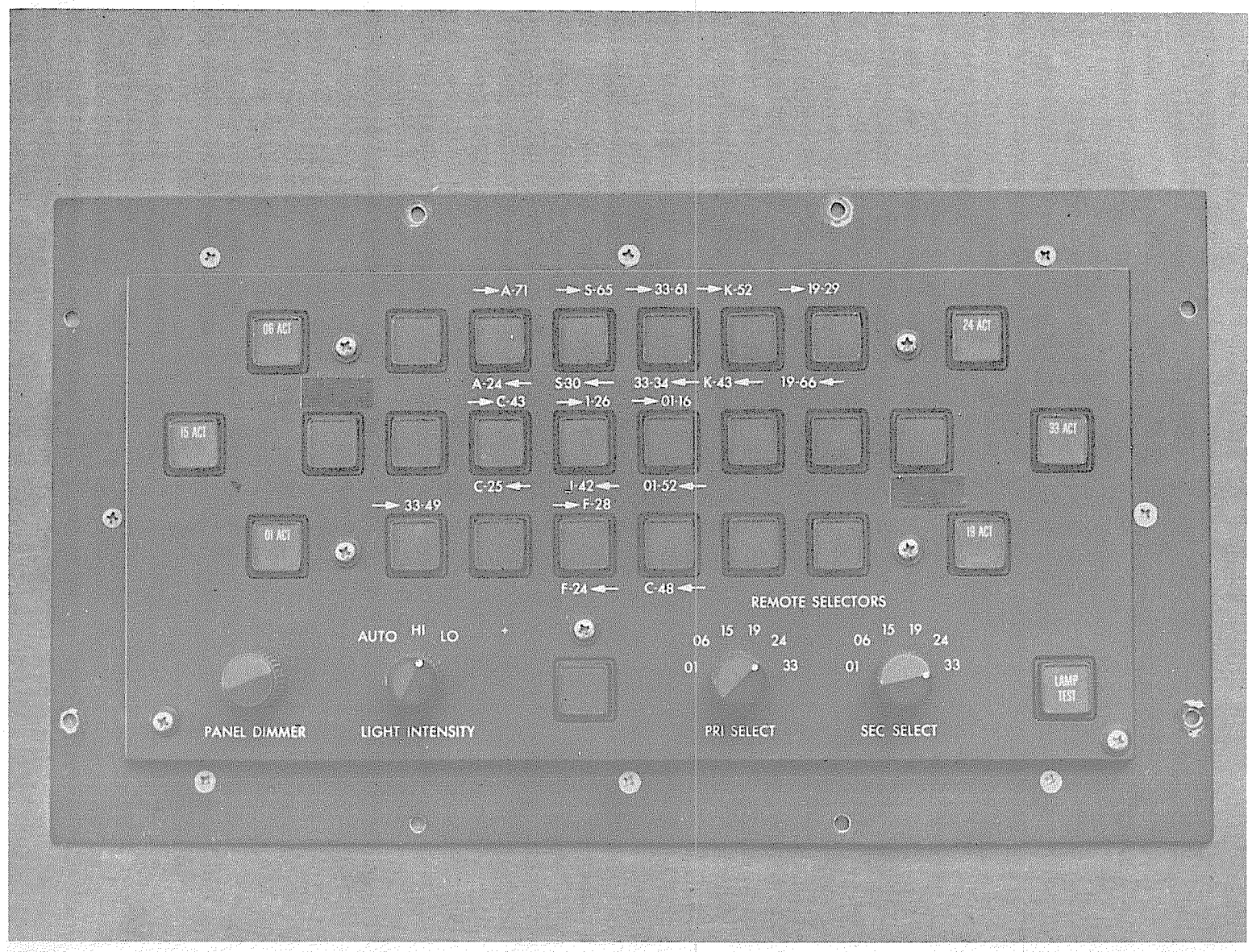

FIGURE A-2. MATRIX VICON CONTROL PANEL

RUNWAY ACTIVATION SW.	LIGHT CLUSTER ACTIVATION SW.	FIELD LIGHT CLUSTER NO.
01 ACT	01 - ECHO/01 - Pri-Sec. Remote Sws.	10
01 ACT	Foxtrot	8
06 ACT	06 - Pri-Sec. Remote Sws.	19
06 ACT	Kilo	4
06 ACT	Golf	6
06 ACT	Alpha - Sierra	2
15 ACT	15 - Pri-Sec Remote Sws.	18
15 ACT	Charlie	14
15 ACT	06/15-33	15
15 ACT	India	12
19 ACT	19 - Golf/19 - Charlie - Pri/Sec Remote Sws.	7
19 ACT	Foxtrot	9
24 ACT	24 - Pri/Sec Remote Sws.	20
24 ACT	Golf	5
24 ACT	Kilo	3
24 ACT	Alpha - Sierra	1
33 ACT	33 - Lima - Pri/Sec Remote Sws.	21
33 ACT	Echo/33 - 01/33	11
33 ACT	India	13
33 ACT	Charlie	16
33 ACT	06/15-33	17

FIGURE A-3. SWITCH ACTIVATION FOR ENABLING FIELD LIGHT CLUSTERS

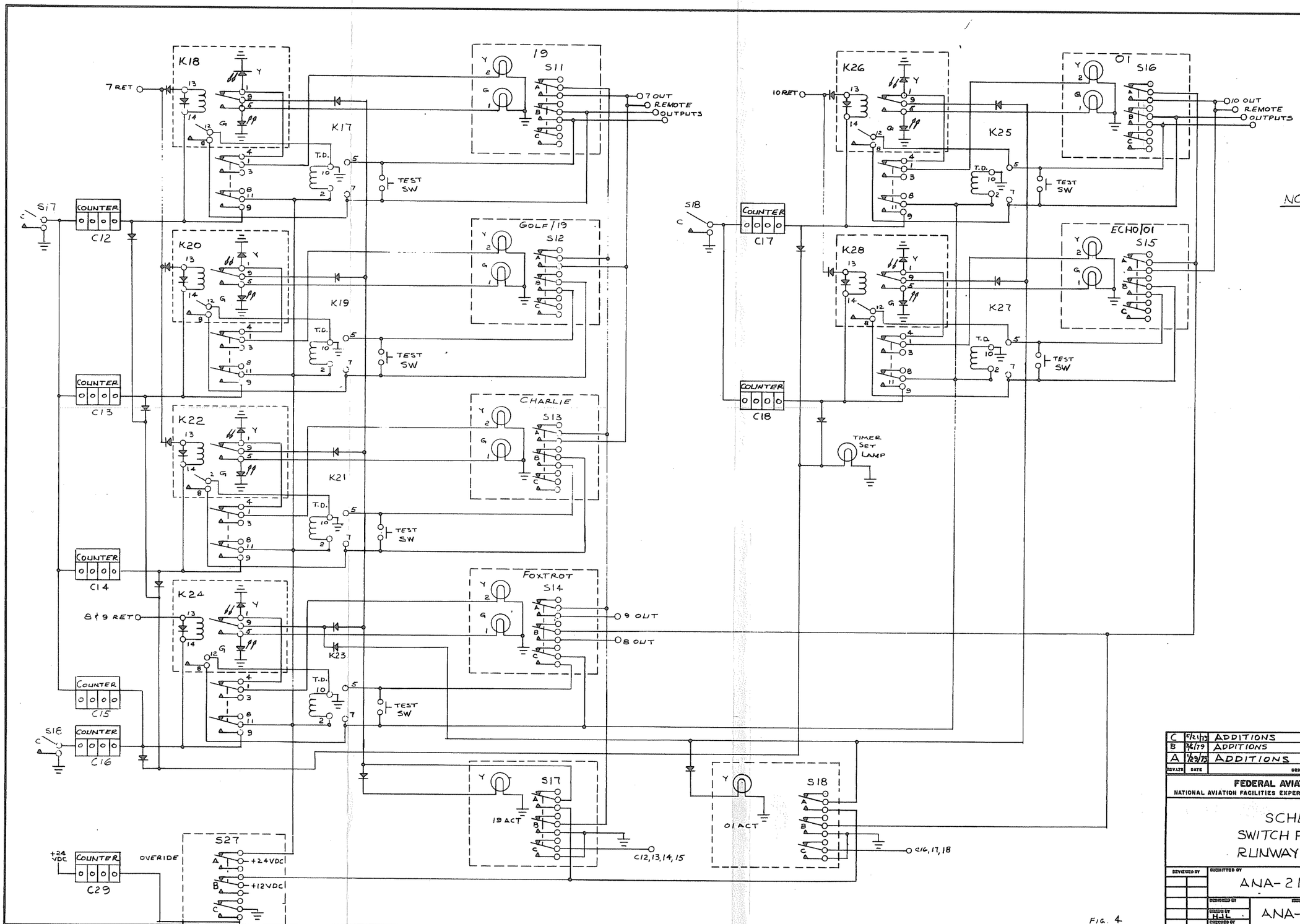

NOTES:

1. S11, S12, S13, S14 S15, S16, S27 ARE MOMENTARY ACTION
2. S17, S18 ARE ALTERNATE ACTION
3. K17, K19, K21, K23, K25, K27 ARE .1-10 SEC TIME DELAY RELAYS
4. LIGHTS ON RELAYS - K18, K20, K22, K24, K26, K28 ARE LED INDICATORS
5. ALL DIODES ARE 1N3613
6. RELAYS AND SWITCHES SHOWN IN NORMAL STATE (NON-OPERATE)

REV LTR	DATE	DESCRIPTION	DRAWN	CHECKED	APPROVED
C	5/21/79	ADDITIONS	SR/HJL		
B	3/6/79	ADDITIONS	SR/HJL		
A	1/29/79	ADDITIONS	SR/HJL		

FEDERAL AVIATION ADMINISTRATION
NATIONAL AVIATION FACILITIES EXPERIMENTAL CENTER — ATLANTIC CITY, N.J.

SCHEMATIC
SWITCH PANEL FOR
RUNWAY 19 AND 01

SUBMITTED BY	ANA-210
APPROVED BY	Richard Nelson
DRAWN BY	HJL
ISSUED BY	ANA-522
DATE	10-4-78
DRAWING NO.	XD-2925

FIG. 4

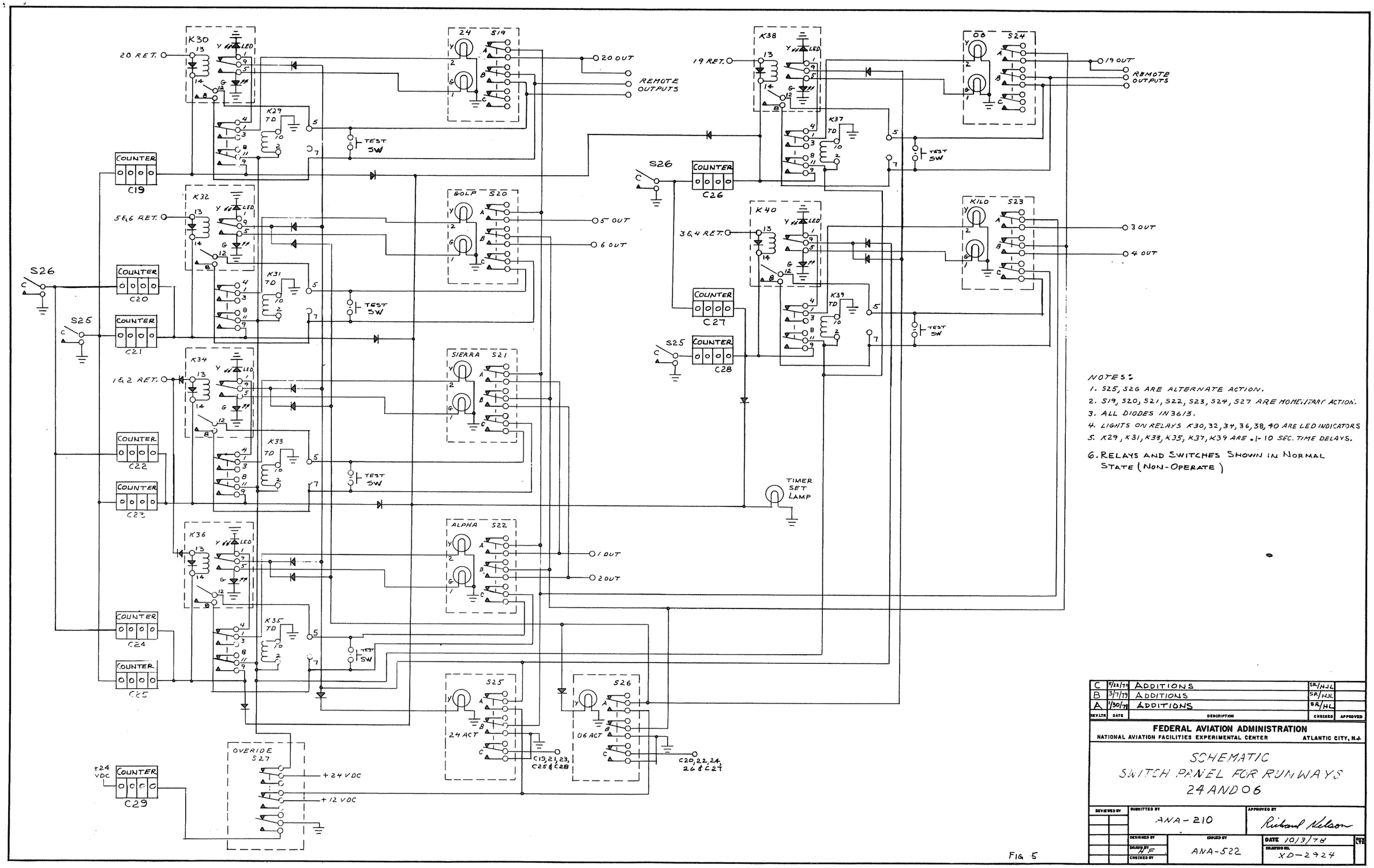

NOTES:

1. S25, S26 ARE ALTERNATE ACTION.
2. S19, S20, S21, S22, S23, S24, S27 ARE MOMENTARY ACTION.
3. ALL DIODES IN3613.
4. LIGHTS ON RELAYS K30, 32, 34, 36, 38, 40 ARE LED INDICATORS
5. K29, K31, K33, K35, K37, K39 ARE .1-10 SEC. TIME DELAYS.
6. RELAYS AND SWITCHES SHOWN IN NORMAL STATE (NON-OPERATE)

REV. LTR.	DATE	DESCRIPTION	CHECKED	APPROVED
C	7/21/79	ADDITIONS	SR/HJL	
B	3/7/79	ADDITIONS	SR/HJL	
A	1/30/79	ADDITIONS	SR/HL	

FEDERAL AVIATION ADMINISTRATION
NATIONAL AVIATION FACILITIES EXPERIMENTAL CENTER — ATLANTIC CITY, N.J.

SCHEMATIC
SWITCH PANEL FOR RUNWAYS
24 AND 06

REVIEWED BY	SUBMITTED BY	APPROVED BY
	ANA-210	Richard Nelson

DESIGNED BY	ISSUED BY	DATE
DRAWN BY JF	ANA-522	10/3/78
CHECKED BY		DRAWING NO. XD-2924

FIG 5

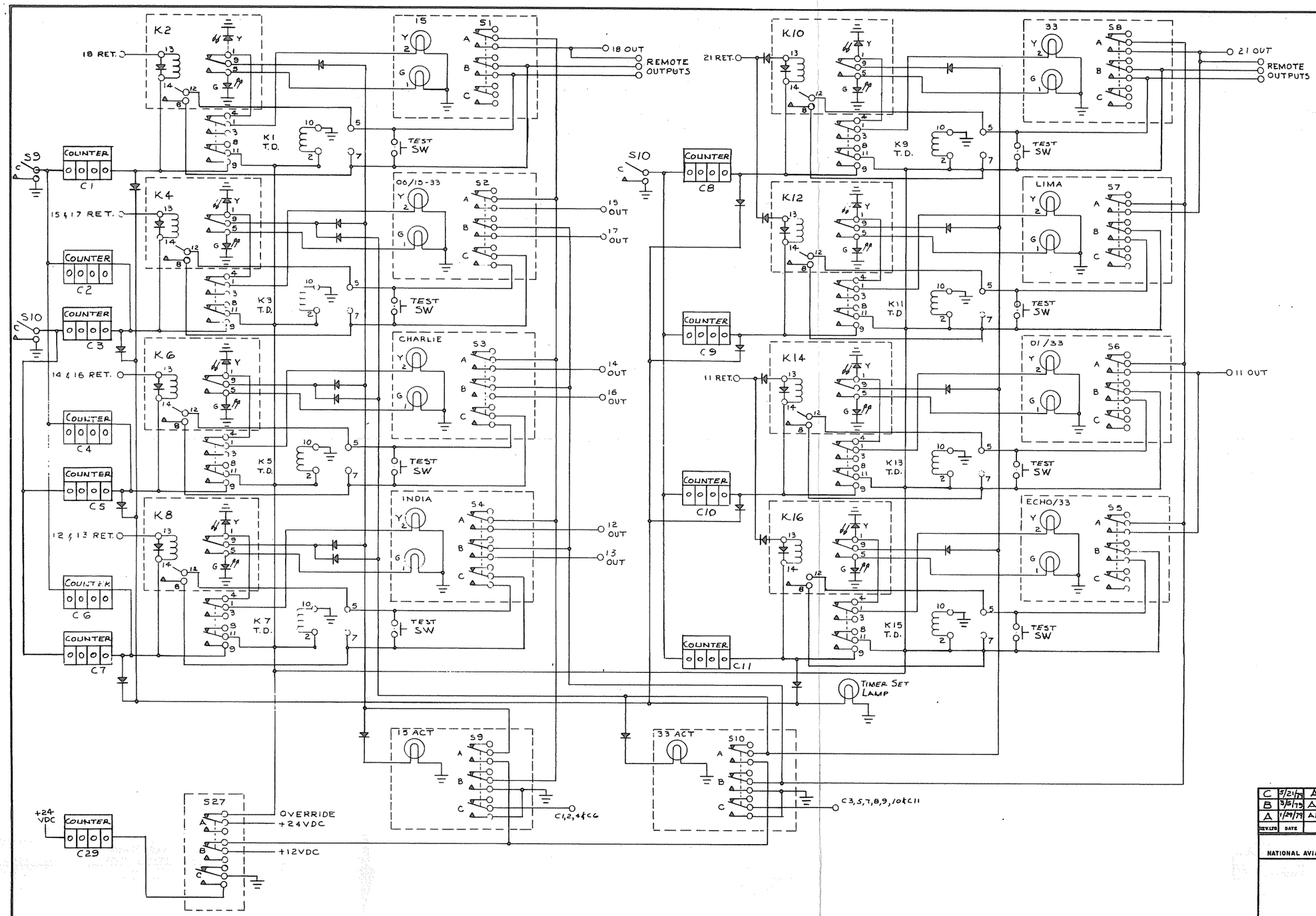

NOTES:

1. S1, S2, S3, S4, S5, S6, S27, S7 & S8 ARE MOMENTARY ACTION.
2. S9 & S10 ARE ALTERNATE ACTION.
3. K1, K3, K5, K7, K9, K11, K14, K13, & K15 ARE .1-10 SEC. TIME DELAY RELAYS.
4. LIGHTS ON RELAYS K2, K4, K6, K8, K10, K12, K14 & K16 ARE LED INDICATORS.
5. ALL DIODES ARE IN3613.
6. RELAYS AND SWITCHES SHOWN IN NORMAL STATE (NON-OPERATE)

REV. LTR	DATE	DESCRIPTION	CHECKED	APPROVED
C	5/21/79	ADDITIONS	SR/HJL	
B	3/6/79	ADDITIONS	SR/HJL	
A	1/29/79	ADDITIONS	SR/HL	

FEDERAL AVIATION ADMINISTRATION
NATIONAL AVIATION FACILITIES EXPERIMENTAL CENTER — ATLANTIC CITY, N.J.

SCHEMATIC
SWITCH PANEL FOR RUNWAY
15 AND 33

REVIEWED BY — SUBMITTED BY: ANA-210 — APPROVED BY: Richard Nelson
DESIGNED BY — ISSUED BY: ANA-522 — DATE: 10-4-78
DRAWN BY: Rafaell — CHECKED BY — DRAWING NO.: XD-2926

FIG. 6

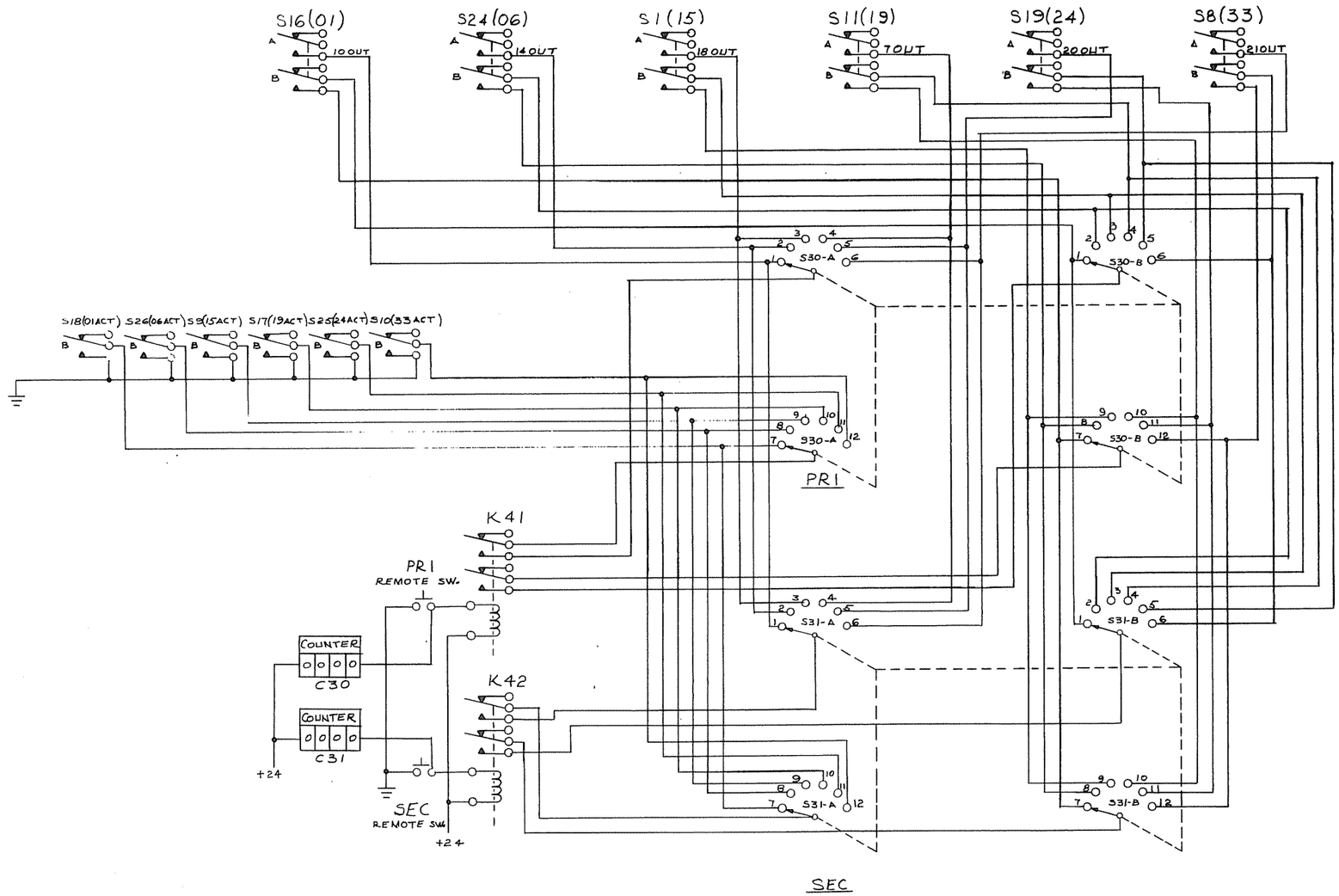

FIG. 7

REV LTR	DATE	DESCRIPTION	CHECKED	APPROVED
B	9/21/79	ADDITIONS	SR/HJL	
A	3/6/79	ADDITIONS	SR/HJL	

FEDERAL AVIATION ADMINISTRATION
NATIONAL AVIATION FACILITIES EXPERIMENTAL CENTER — ATLANTIC CITY, N.J.

SCHEMATIC OF REMOTE CONTROL SWITCHING

REVIEWED BY
SUBMITTED BY: ANA-210
APPROVED BY: Richard Nelson
DESIGNED BY
DRAWN BY: HJL
CHECKED BY
ISSUED BY: ANA-522
DATE: 10-10-78
DRAWING NO.: XD-2928
REV. LTR.

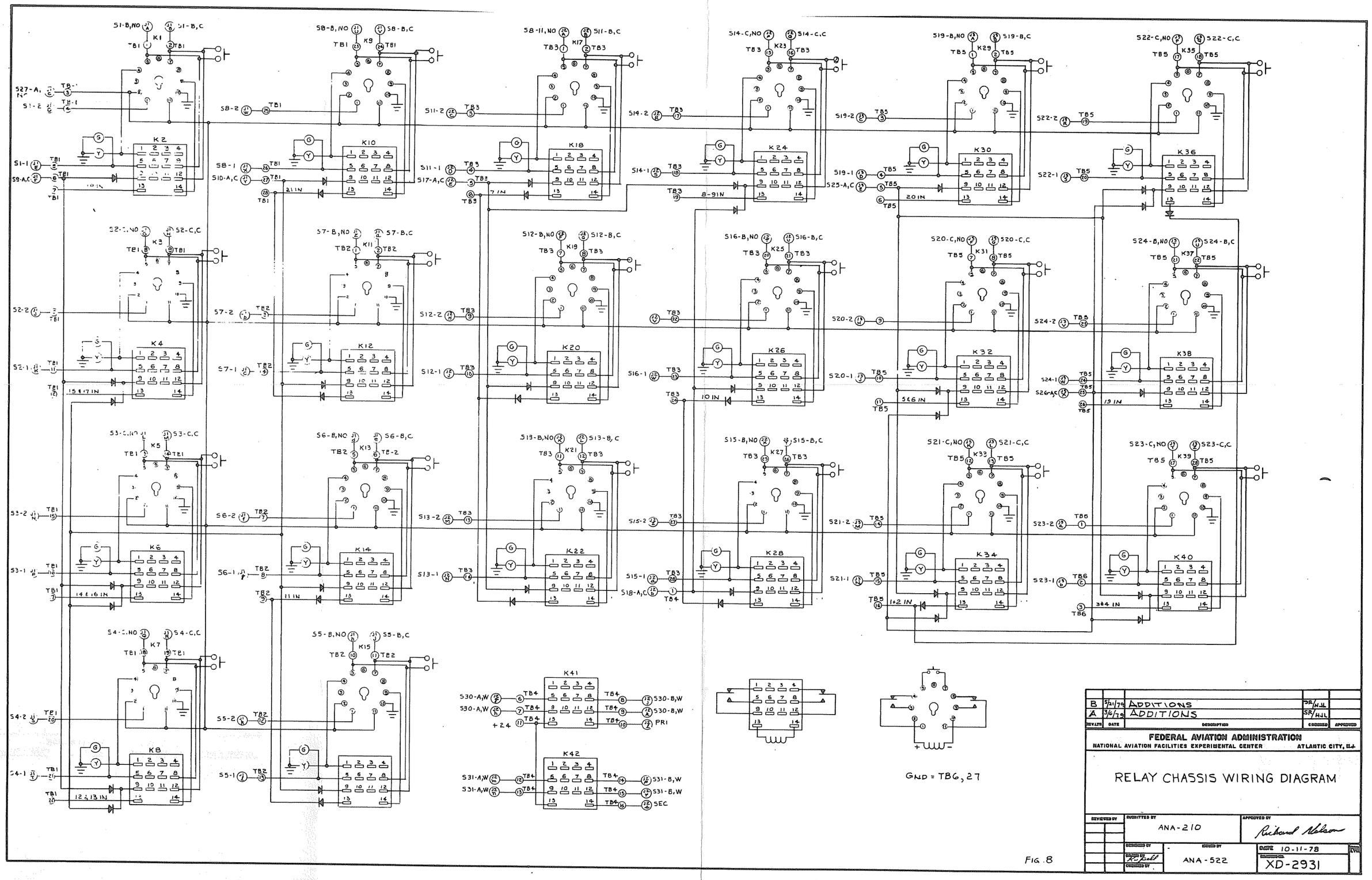

K1
K2
K3
K4
K5
K6
K7
K8
K9
K10
K11
K12
K13
K14
K15
K17
K18
K19
K20
K21
K22
K23
K24
K25
K26
K27
K28
K29
K30
K31
K32
K33
K34
K35
K36
K37
K38
K39
K40
K41
K42
S30-A,W
S30-B,W
S31-A,W
S31-B,W
PRI
SEC
+24
GND = TB6, 27
B 5/21/79 ADDITIONS SR/HJL
A 3/6/79 ADDITIONS SR/HJL
REV LTR DATE DESCRIPTION CHECKED APPROVED
FEDERAL AVIATION ADMINISTRATION
NATIONAL AVIATION FACILITIES EXPERIMENTAL CENTER ATLANTIC CITY, N.J.
RELAY CHASSIS WIRING DIAGRAM
REVIEWED BY
SUBMITTED BY
ANA-210
APPROVED BY
Richard Nelson
DESIGNED BY
ISSUED BY
ANA-522
DATE 10-11-78
XD-2931

FIG. 8

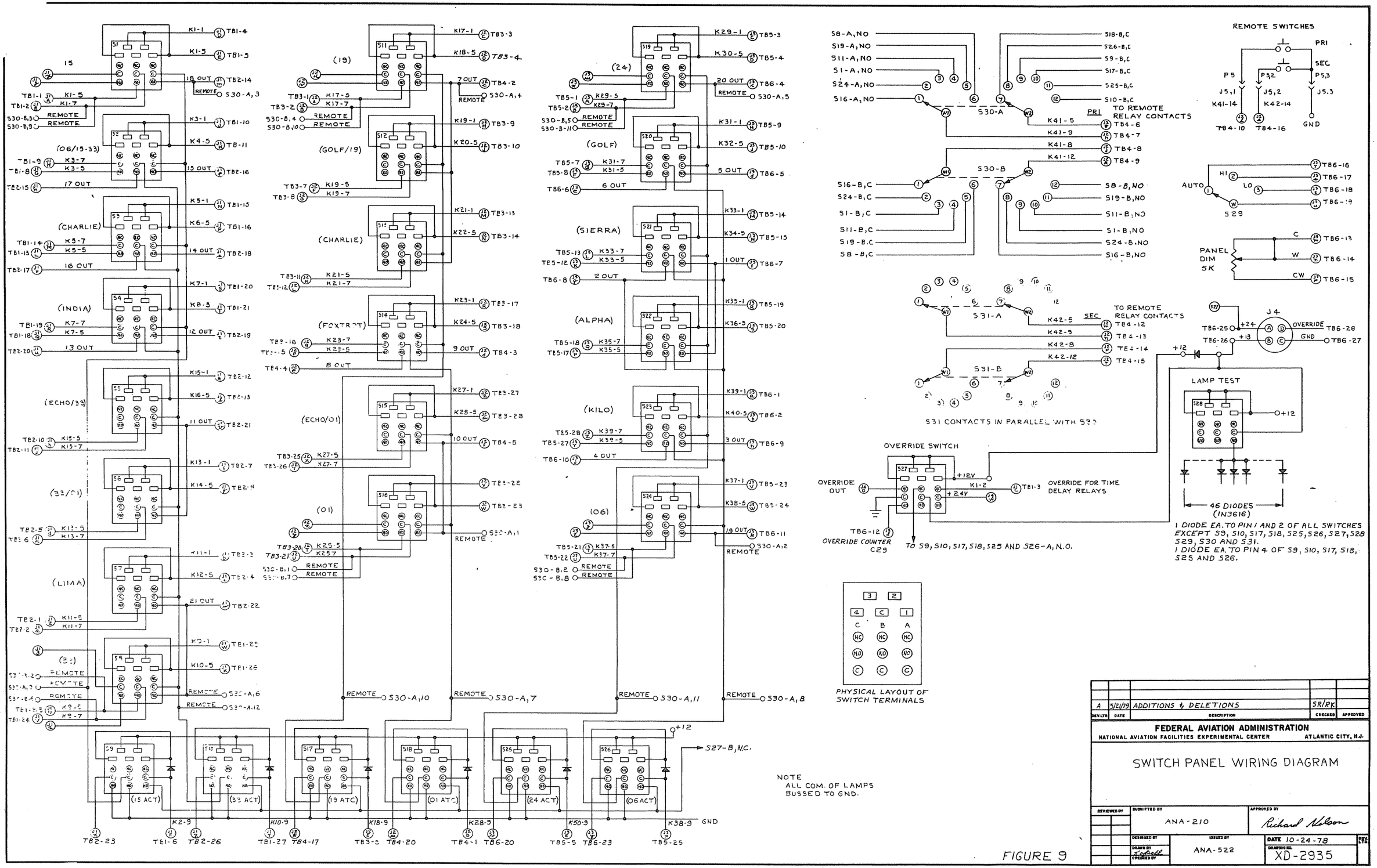
REMOTE SWITCHES
PRI
SEC
P5
P32
P5,3
J5,1
J5,2
J5.3
K41-14
K42-14
TB4-10
TB4-16
GND
S30-A
S30-B
TO REMOTE RELAY CONTACTS
S31-A
S31-B
S31 CONTACTS IN PARALLEL WITH S30
AUTO
HI
LO
S29
PANEL DIM 5K
J4
OVERRIDE
GND
LAMP TEST
46 DIODES (IN3616)
1 DIODE EA. TO PIN 1 AND 2 OF ALL SWITCHES EXCEPT S9, S10, S17, S18, S25, S26, S27, S28 S29, S30 AND S31.
1 DIODE EA. TO PIN 4 OF S9, S10, S17, S18, S25 AND S26.
OVERRIDE SWITCH
OVERRIDE OUT
OVERRIDE COUNTER C29
OVERRIDE FOR TIME DELAY RELAYS
TO S9, S10, S17, S18, S25 AND S26-A, N.O.
PHYSICAL LAYOUT OF SWITCH TERMINALS
(15)
(06/15-33)
(CHARLIE)
(INDIA)
(ECHO/33)
(33/01)
(LIMA)
(19)
(GOLF/19)
(CHARLIE)
(FOXTROT)
(ECHO/01)
(01)
(24)
(GOLF)
(SIERRA)
(ALPHA)
(KILO)
(06)
(15 ACT)
(33 ACT)
(19 ATC)
(01 ATC)
(24 ACT)
(06 ACT)
S27-B, N.C.
NOTE
ALL COM. OF LAMPS BUSSED TO GND.
A 5/21/79 ADDITIONS & DELETIONS SR/RK
REVISN DATE DESCRIPTION CHECKED APPROVED
FEDERAL AVIATION ADMINISTRATION
NATIONAL AVIATION FACILITIES EXPERIMENTAL CENTER ATLANTIC CITY, N.J.
SWITCH PANEL WIRING DIAGRAM
REVIEWED BY
SUBMITTED BY ANA-210
APPROVED BY Richard Nelson
DESIGNED BY
DRAWN BY
CHECKED BY
ISSUED BY ANA-522
DATE 10-24-78
DRAWING NO. XD-2935

FIGURE 9

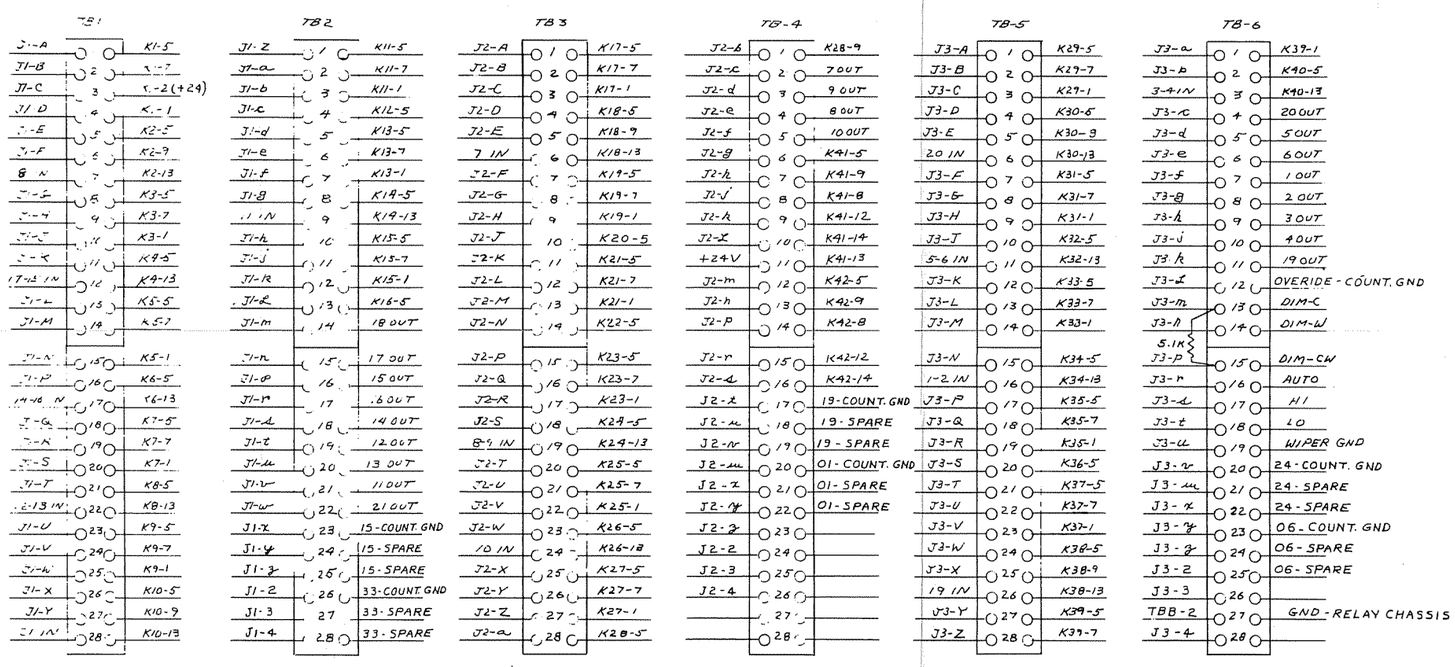

FIGURE 10

REV. LTR	DATE	DESCRIPTION	CHECKED	APPROVED
A	5/24/79	ADDITIONS & DELETIONS	RN/RK	

FEDERAL AVIATION ADMINISTRATION
NATIONAL AVIATION FACILITIES EXPERIMENTAL CENTER — ATLANTIC CITY, N.J.

RELAY CHASSIS TERMINAL WIRING

REVIEWED BY
SUBMITTED BY: ANA-210
APPROVED BY: Richard Nelson
DESIGNED BY
DRAWN BY: MDF
CHECKED BY
ISSUED BY: ANA-522
DATE: 3-10-78
DRAWING NO. XD-2930

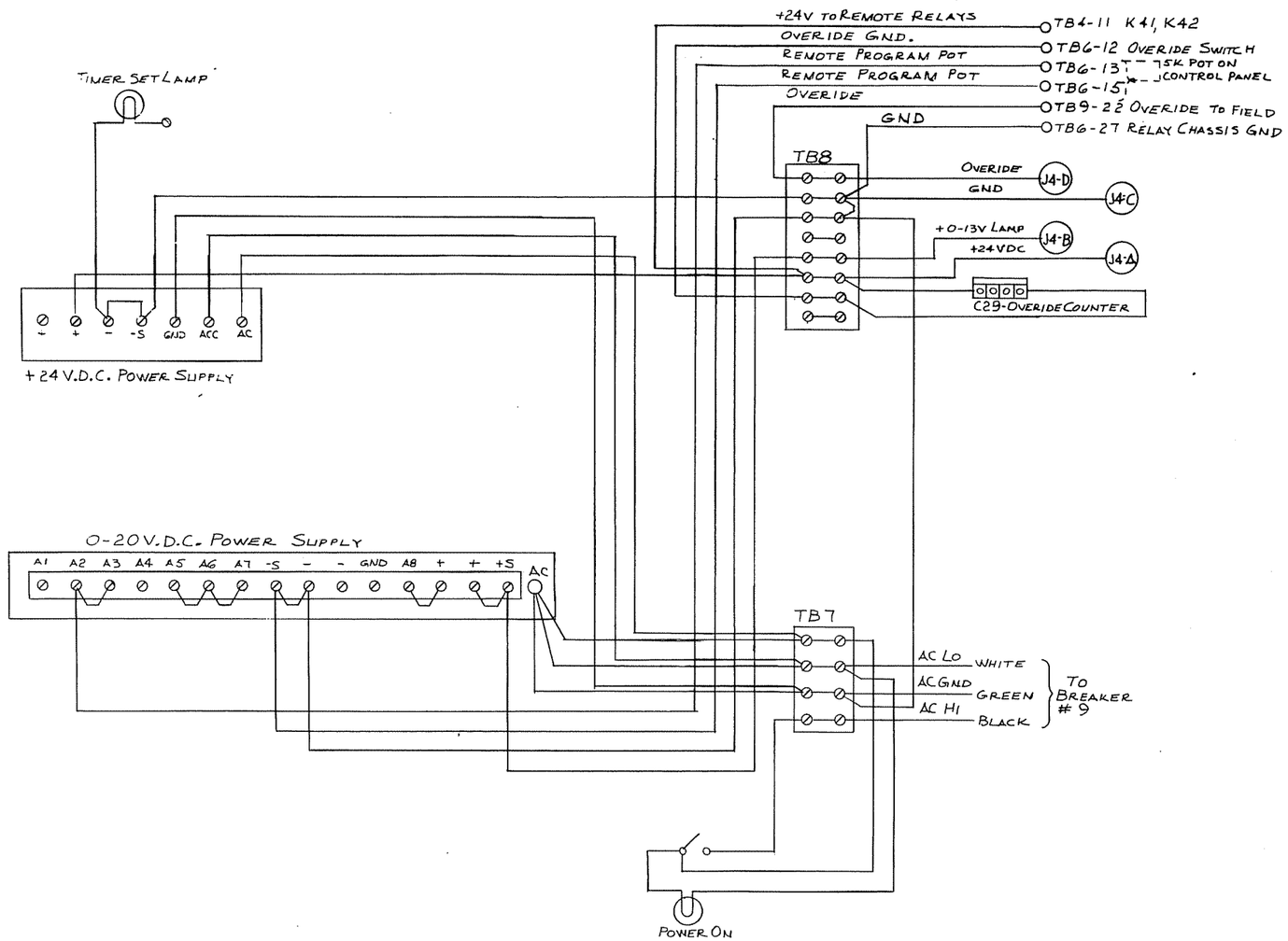

FIG. 11

REV. LTR	DATE	DESCRIPTION	CHECKED	APPROVED

FEDERAL AVIATION ADMINISTRATION
NATIONAL AVIATION FACILITIES EXPERIMENTAL CENTER — ATLANTIC CITY, N.J.

POWER SUPPLIES AND TERMINAL BLOCK WIRING DIAGRAM

REVIEWED BY | SUBMITTED BY: ANA-210 | APPROVED BY: Richard Nelson

DESIGNED BY | DRAWN BY: H.J. | CHECKED BY | ISSUED BY: ANA-522 | DATE 5/21/79 | DRAWING NO. XD-2991 | REV.

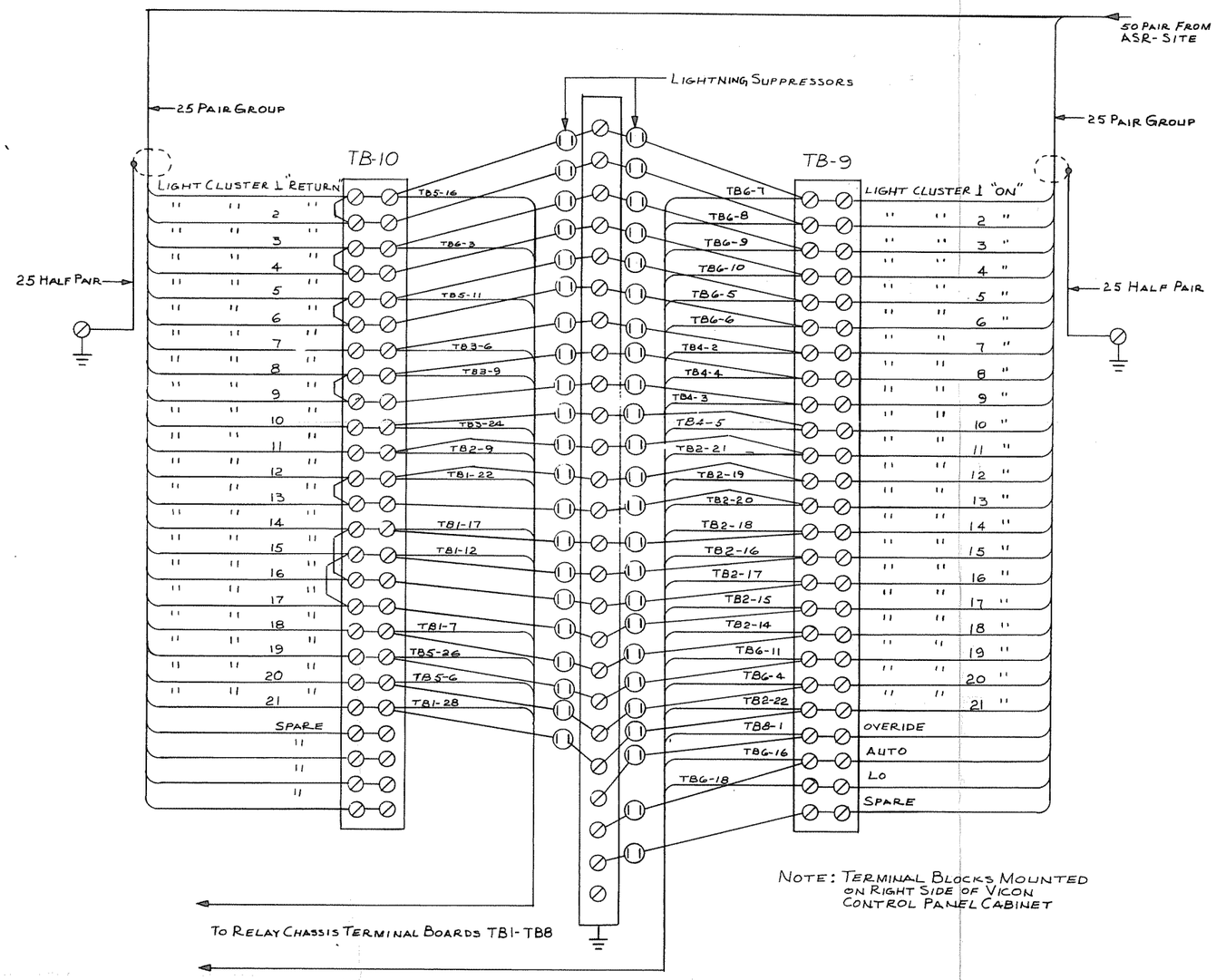

NOTE: TERMINAL BLOCKS MOUNTED ON RIGHT SIDE OF VICON CONTROL PANEL CABINET

FIG-12

REV. LTR	DATE	DESCRIPTION	CHECKED	APPROVED

FEDERAL AVIATION ADMINISTRATION
NATIONAL AVIATION FACILITIES EXPERIMENTAL CENTER — ATLANTIC CITY, N.J.

FIELD LIGHT CLUSTER,
INPUT-OUTPUT
WIRING DIAGRAM

REVIEWED BY	SUBMITTED BY	APPROVED BY
	ANA-210	Richard Nelson
	ANA-522	DATE 5/21/79
		XD-2988

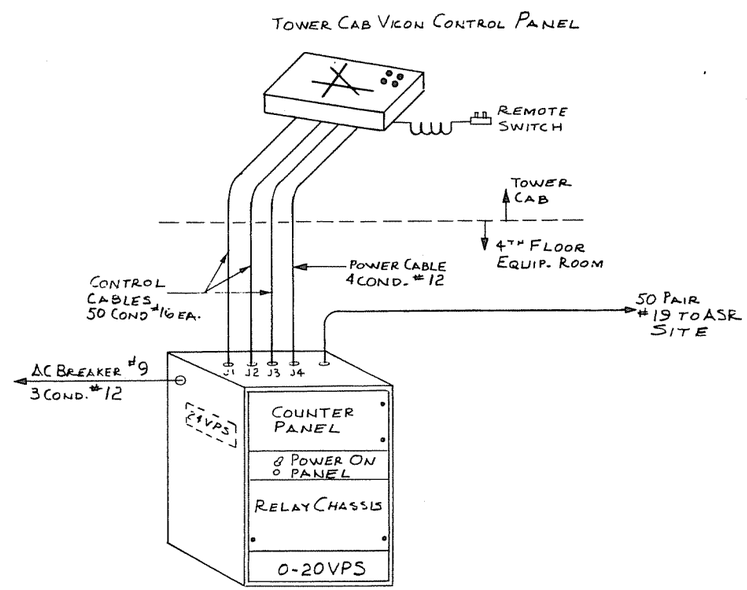

REV. LTR	DATE	DESCRIPTION	CHECKED	APPROVED

FEDERAL AVIATION ADMINISTRATION
NATIONAL AVIATION FACILITIES EXPERIMENTAL CENTER — ATLANTIC CITY, N.J.

VICON-CONTROL PANEL
EQUIPMENT AND
INTER-CONNECTIONS

REVIEWED BY	SUBMITTED BY	APPROVED BY
	ANA-210	Richard Nelson

DESIGNED BY	ISSUED BY	DATE 5-24-79	REV. LTR.
DRAWN BY HJL	ANA-522	DRAWING NO. XD-2992	
CHECKED BY			

FIG 13

APPENDIX B

OPERATIONAL INSTRUCTIONS AND DESCRIPTION FOR THE VICON CONTROL PANELS

OPERATIONAL INSTRUCTIONS AND DESCRIPTION FOR THE VICON CONTROL PANELS

TABLE OF CONTENTS

	Page
INTRODUCTION	1
DESCRIPTION OF VICON CONTROL DISPLAY PANELS	2
TURNING THE VICON SYSTEM ON OR OFF	2
Runway Activation	2
Runway Deactivation	2
OPERATION OF THE VICON SYSTEM	2
CANCELLATION OF TAKEOFF CLEARANCE	4
TESTING OF CONTROL PANELS AND VICON SWITCHES	4
Lamp Test (Control Panel Lamps)	4
Remote Control Unit	5
VICON Light Cluster Test	5
VICON LIGHT CLUSTER INTENSITY	7
Normal Operation (Day or Night)	7
IFR (Reduced Visibility)	7
CONTROL PANEL LIGHT INTENSITY	7
MALFUNCTIONS	7
Panel Back Lighting Bulbs	7
Runway Activation Switch	8
Runway Activation Switch Bulbs	8
VICON Light Cluster Switches	8
VICON Light Cluster Switch Bulbs	8
Over-ride Switch	9
Over-ride Switch Bulbs	9
MAINTENANCE NOTIFICATION	12
GLOSSARY	14

OPERATIONAL INSTRUCTIONS AND DESCRIPTION FOR THE VICON CONTROL PANELS

The following information is intended to describe the operation of the VICON control panels, which will be used during the testing of the VICON system at the Bradley International Airport. This will provide a reference document to assist in solving operational problems, if any may arise, during the training and testing periods.

In all, there will be two different control panels (See figures 1 and 2) used during the testing period. These panels are referred to as the "Matrix" and "Mimic" type panels.

The matrix panel was designed and will be tested because of the awarnes of a critical lack of space available in the consoles of most control tower cabs. The matrix panel is the smallest of the two panels to be tested.

The operation and functions of each of the panels is identical. Each panel contains the same type and number of switches and other controls. Figures 1 and 2, are used for training purposes and for the description of the function or operation of each switch or control. In these figures, the switches and controls are lettered for identification of functions.

Figures 3 and 4, are the same panels, this time however, the controls and switches are marked with the identification, as they will be found on the actual control panels .

The following, is a description of the operational function of each of the various switches and controls on the control panels and instructions for the operational use of the control panels.

I. Description of the VICON Control Display Panels, Switches and Controls.

Figures 1 through 4 are drawings of the control display panels which are to be installed in the console of the Bradley Control Tower, and will be used during the evaluation of the VICON System. These drawings, provide a legend identifying each of the switches and controls on the panels and also with the actual idenfification, as will be seen on the actual control display panels. The description of each switch or control, along with its purpose and function, is provided in the text of this document.

II. Turning the VICON System ON or OFF.

There will always be poser supplied to the control panel and there is no ON/OFF switch, as such, on the panel. The control panels are so designed that the local controller may activate only those switches controlling those departure points on the active runway or runways. All other VICON light cluster switches will be dead, or unusable, to eliminate or lessen the chance for accidental illumination of the wrong VICON light cluster.

A. Runway Activation - To activate the VICON System on the appropriate departure runway or runways, depress the "Runway Activation Switch" (Switch A, figures 1 and 2). The runway activation switch to be depressed is that A-button or switch marked for the runway or runways which are to be the "active" runways. Example; to activate runway 06, the A-button marked "06 ACT", would be depressed.

The activation of this button will cause a "green bar" to light, in the lower portion, of that runway activation switch, and all VICON light cluster switches, for departure points on that runway, will light with an "amber" light in the upper portion of the switch faces.

Only departure points that can be utilized in that direction of operation will become active. Only switches that are lighted, "amber identification", can operate a VICON light. All other VICON light switches will be dead, and will not turn a VICON light cluster on if depressed.

B. Runway Deactivation - In the event the system is to be turned off, or a runway selection changed, depress the "Runway Activation Switch" on the runway which is to be deactivated. This action will deactivate all VICON light cluster switches on that runway and the green bar on the Runway Activation Switch will go out. If a runway change is being made, go to step A and depress the appropriate Activation Switch or Switches for the new active runway or runways.

III. Operation of the VICON System.

Once the VICON switches on the active runway/runways have been activated, (E buttons, figure 1 and 2), these switches will be lighted with an "Amber Light", which will spell out the identity

of each switch (upper half of the switch face). Operation of the system is accomplished in the following manner.

1. Clear the aircraft for takeoff using present prescribed and published procedures.

2. Concurrantly, or immediately thereafter, depress the VICON light cluster switch corresponding to the departure point being used by the departing aircraft.

   When the VICON switch has been activated, the "amber" ident. of the switch will go out and will be replaced by a green ident. in the lower portion of the switch face. The green light will remain on until such time as the electronic device, being used for that departure point, turns the VICON lights off. At that time, the "green" switch identity will go out and will be replaced by the "amber" switch identity.

Two electronic devices are being utilized to deactivate the VICON light clusters, they are:

1. Microwave System - A microwave system is being utilized to deactivate the VICON lights at the ends of runway 06, 15, 24, and 33. The aircraft, which has just been cleared for takeoff will turn the lights out as it breaks the beam of the microwave sensors.

2. Timers - At all other departure points on the airport, timers are being used to deactivate the VICON light clusters.

Note: The control panel affords the local controller the status of the VICON system at all times. The switches changing from the amber color to green and back to amber, provide the local controller with a visual reference to the status of the system.
In addition to telling when the VICON light clusters are on or off, the control panel also affords a complete monitor of the system for malfunctions. The green light in the switch within the control panel is not turned on by the mere activation of the switch, rather, it requires a signal to be sent from the tower to the equipment on the field, through the filaments of all three bulbs of the VICON light cluster, and a signal returned to the equipment in the tower before the green light will come on. Any failure to obtain a green light on a VICON light cluster switch, providing the switch bulb is not burned out, indicates a malfunction somewhere in the system to that particular VICON position. The failure could be a bulb in the VICON light cluster, or it could be a more serious type of failure. The control panel will not pinpoint the actual malfunction.

IV. Cancellation of Takeoff Clearance

In the event a takeoff clearance must be cancelled for any reason;

A. Cancel the takeoff clearance by voice radio instruction in accordance with prescribed published procedures.

B. Cancel the VICON light by use of the "Over-ride" switch (Button F, figure 1 and 2).

The over-ride switch will immediately turn off any VICON light cluster which may be on at the time and will reset the control panel for immediate reuse. If more than one VICON light cluster was turned on, the over-ride feature will turn all VICON light clusters off when depressed.

The over-ride may also be used in the event the system is operating too slowly. There may be occasions when an aircraft is to be placed on a runway immediately behind a preceeding departure. To preclude placing the second aircraft on the runway with a VICON cluster still operating, the VICON light can be deactivated by using the over-ride switch prior to having the second aircraft taxi into position.

V. Testing the Control Panel and VICON Switches

A complete test of the VICON control panel and system should be accomplished at least once each 24 hours, prefferably during the mid-watch. The control panel and VICON system should also be tested at least once each watch, however, this test can be limited to that portion of the panel and system for the present runway configuration (active runways only).

A. Lamp Test (Control Panel Lamps) - This test should be accomplished during both the 24 hour check and the watch check. Procedure and actions required will be the same for either the 24 hour panel check or the watch check.

Depress the lamp test button (Button B, figures 1 and 2). While holding the lamp test button down, visually check all switch lamps on the VICON panel. The test button, when depressed, will illuminate all switch lamps, both amber and green. If for any reason a switch lamp does not light, maintenance (Comm. Unit) should be notified.

Malfunction of the switch bulbs is considered a failure of low priority. In the event a failure of a switch bulb is discovered during the time Comm. Unit personnel are not on duty (Mid watch) the reporting of this failure can be delayed until such time as Comm. Unit personnel report for duty.

B. Remote Control Unit - The light weight remote control unit was designed to provide the controller with the ability to use the VICON system, on a limited bases, while providing the controller with some freedom of mobility while controlling traffic.
This unit will allow the control of the VICON lights at two locations (Runway ends), these known as the Primary and Secondary departure points. These are selectable by the controller.

The remote control unit should be checked at least once each watch. The test procedure is as follows:

1. Select the Primary and Secondary departure points by using controls C and D (figure 1 and 2).

2. Depress the Primary switch on the remote unit, observe the operation of the corresponding switch on the control panel.

3. Depress the Secondary Switch on the remote unit, observe the operation of the corresponding switch on the control panel.

Note - The Primary and Secondary departure points utilized by the remote control unit are runway ends. When testing and the remote unit is set for runway 06, 15, 24 or 33, it must be remembered that the VICON system at these points is deactivated by the microwave system. During a test therefore, it will be necessary to manually deactivate the system by use of the Over-ride switch.

C. VICON Light Cluster Test

All VICON clusters should be tested at least once each 24 hour period. It is suggested that this complete light test be performed during the mid-shift.
Testing of the VICON light clusters for the active runway or runways is suggested for the start of each watch.

Visual checking of the lights by vehicle is not necessary with the VICON system since the control panel is a complete monitor of the system including the light bulbs. The checking can be accomplished quickly and at times when the tests would present no interference with operations.

Testing Procedures are as follows:

A. Testing all VICON Light Clusters (24 hour test)

1. Select time when traffic will permit an interference free testing period. It is estimated that two minutes or less should be all the time required. Length of the test is entirely up to the controller.

2. Activate runways 01, 06 and 15

3. Activate each VICON light cluster in sequence on runway 01.

4. As each light is activated and the green light is observed on the switch, cancel by use of the over-ride and proceed to the next switch.

5. Follow steps 3 and 4 on runway 06 and 15.

6. After completing the test on runway 01, 06 and 15, deactivate these runways and activate runways 19, 24 and 33.

7. Follow steps 3 and 4 until all lights have been checked.

8. Upon completion of the test, deactivate the test runways and activate the switches for the active runway or runways.

Since this test is performed at a time the Comm. Unit personnel are not normally on duty, a priority call back has been established for certain failures found during testing of the VICON system. In the event of a possible Light Cluster failure, priority call back of maintenance should be made only when that cluster is located at the end of an active runway, or if weather forecasts indicate a possible runway shift, prior to Comm Unit personnel reporting for duty for their next scheduled shift, and the cluster is at the end of a runway which is anticipated to be the new active runway. See Section VIII for additional information on priority call back.

B. Active Runway/Runways VICON Light Cluster Test

This test should be accomplished as soon as practical after a shift change. Testing would be the same as step 3 and 4 in Paragraph A above, however, only on the runways in use.

If an abnormality is found in the operation of any VICON light Clusters, and they are located on a runway presently in use for departures, contact Comm. Unit maintenance through normal notification procedures. If, in the event notification occurs at a time Comm. Unit personnel are not on duty, follow instructions in section VIII for priority call back information.

C. Microwave Deactivation System Test

Testing of the Microwave Deactivation devices should be tested at least once each 24 hour period, preferably on the mid-watch. This test should be conducted at the time Airport personnel are performing a runway check. As the test vehicle enters the runway (runways 6/24 or 15/33) the VICON light should be turned on. The test vehicle, when passing through the microwave deactivation devices, should turn the VICON lights off. As the vehicle approaches the far end of the runway, the light at that end can be activated. Again, the vehicle should deactivate the lights.

In the event the VICON lights are not deactivated by the vehicle, and that cluster is located at the end of an active runway, maintenance should be called on the priority call back basis. Outages of the microwave deactivation system on other than active runways will not be considered an a call back priority and notification can be delayed until the Comm. Unit personnel

report on their next scheduled shift.

VI. VICON Light Cluster Intensity

Button G, figure 1 and 2, controls the intensity of the VICON light clusters. The intensity can be controlled automatically by use of a photoelectric system, or manually. The use of these systems are explained below.

A. Automatic Operation (Photoelectric Cell)

1. Normal Operation (Day or Night) - Intensity switch (G) "Auto Position". The photoelectric cell will control the intensity automatically increasing the intensity of the light clusters during the day and decreasing the intensity at night.

2. IFR (Reduced Visibility) - When there is reduced visibility, the tendency for the photoelectric cell, because of the darkness, will be to reduce the intensity of the VICON lights. During these conditions of reduced visibility, it will be necessary for the controller to take manual control of the lights and increase the intensity by placing the intensity switch (Switch G figure 1 and 2) on the "High" setting. This action should be taken when the visibility reaches ¼ (one quarter) mile or less.

VII. Control Panel Light Intensity

Control H, figures 1 and 2, controls the intensity of the lights or lamps in the switches of the control panel. It is anticipated that a higher intensity will be needed during the day time with bright sunlight than would be required during the night. The controller should adjust this intensity to suit the need according to conditions.

VIII. Malfunctions

This section is intended to suggest the proper procedure to follow if malfunctions should occur with the control panel operation or other parts of the system. It is highly probable that all possibilities or types of situations may not be covered here, in any event, your local maintenance personnel (Comm. Unit) should be notified immediately if there is any evident malfunction or if some strange occurances place any doubt on the proper operation of the VICON system.

A. Malfunctions of Control Panel or Panel Components

1. Panel Lights

a. Panel Back Lighting Bulbs - In the event bulbs, which are in the control panel for the purpose of backlighting, should burn out, maintenance should be advised. This condition should not hinder or necessitate the curtailment of the use of the VICON system. Maintenance will however, need to deactivate the control panel to replace the bulb. Operation of the VICON system will need to be suspended

VI. VICON LIGHT CLUSTER INTENSITY

A. Automatic Operation (Photoelectric Cell)

1. A malfunctioning photoelectric cell which causes incorrect light cluster intensity would normally be reported by a pilot, as it is not nomitored at the VICON control panel. The intensity of the light cluster should then be controlled manually by placing the intensity switch on the "HI" setting during daytime hours and on the "LO" setting during nighttime hours.

during the time that maintenance is being performed on the control panel.

Should this outage be discovered during the time no Comm. Unit personnel are on watch, delay notification until the Comm. Unit personnel report for duty.

b. Failure or Malfunction of Runway Activation Switch - In the unlikely event that a "Runway Activation Switch" should malfunction, it would not be possible for the controller to activate any of the VICON light cluster switches on that particular runway. If that runway, at the time, was to be an active departure runway, use of the VICON system on that runway should be suspended until such time as maintenance has corrected the problem.

Should this outage be found during the time no Comm. Unit personnel are on watch, and the switch effects operation of the VICON system on an active runway, Priority call-back of the Comm. Unit maintenance is required.

c. Runway Activation Switch Bulb Outages - Each runway activation switch contains two bulbs, one which is visible at all times, provided the intensity has not been turned to its minimum setting, the amber identity light (upper portion of the switch) and the green bar, lit only when that switch has been activated. If either or both of these bulbs should be burned out or inoperative and the system still functional, which can be determined by the lighting and functioning of the VICON light cluster switches, operation of the system can continue normally.

This is not considered a priority failure. Maintenance should be notified during their normal shift schedule.

d. VICON Light Cluster Switches - Failure of a light cluster switch, when it is that switch controlling the light cluster at the end of an active runway, is considered a priority call-back failure and Comm. Unit personnel should be notified immediately. Failure of a switch other than at the end of the runway will not require maintenance to be called back to work, notification can be delayed until the Comm. Unit personnel report for their next regular scheduled watch. In any case, operation of the system should continue in order to obtain pilot comments during the test period.

e. VICON Light Cluster Switch Bulbs - Each light cluster switch contains two bulbs, as did the runway activation switch. The upper bulb will be amber colored, the lower green colored. The operation of each of the lights, provides for the monitor of the systems operation. The

capability to monitor the system is somewhat jepardized if either of these bulbs should burn out, however, normal operation of the system should continue.

Comm. Unit maintenance should be notified only during their normal watch schedule. Failures occuring at other times may be delayed until their return to the next scheduled watch.

Note - Though it is an unusual occurance and it is not anticipated that it should occur during the testing period, there could be an occurance of a short in a bulb in the VICON light switch. The indication of such an occurance would be the dimming of all the lights in the switches for that particular runway when the switch with the shorted bulb is depressed. It, at any time a VICON light cluster switch is activated and all the switches, associated with that runway, dim, deactivate the VICON light by using the over-ride switch. Discontinue use of the VICON System at that departure point until maintenance has repaired the problem. This will require priority call back of maintenance personnel only if the malfunction occurs in a switch for the end of an active runway.

f. Over-ride Switch - If the over-ride switch should malfunction and does not deactivate the VICON lights, operation of the VICON system should be discontinued until the malfunction has been corrected. This malfunction will require priority call back of maintenance personnel.

g. Over-ride Switch Bulbs - In the event the bulb in the over-ride switch is not functioning, however, the over-ride switch itself is operational, operation of the VICON system should continue normally. Maintenance should be notified during their normal scheduled watch.

Note:

To make necessary repairs, maintenance personnel at times, will need to take control of the VICON control panel. The maintenance personnel should be provided access to the control panel to correct malfunctions at the earliest opportune time. Operation of the VICON system should be suspended until such time as maintenance has been completed and the system is once again operational.

Table 1 provides a quick reference guide to malfunctions with recommendations for continuation of operation or suspension of operation. The suspension of operation may be for a particular departure point, a runway, or the entire system.

TABLE 1

POSSIBLE MALFUNCTIONS AND RECOMMENDATION FOR CONTINUATION OR SUSPENSION OF OPERATION

MALFUNCTION	CONTINUE OPERATION	SUSPEND OPERATION
1. Panel Back Lighting Lamps	X	
2. Failure of Runway Activation Switch (Other than an Active Runway)	X	
3. Failure of Runway Activation Switch (Active Runway)		X (Runway - System if switches for all active rwys. are inopv.)
4. VICON Light Cluster Switches (Active Runway)	X	
5. VICON Light Cluster Switches (Other than Active Runway)	X	
6. VICON Light Cluster Switch Bulbs (Active Runway)	X	
7. VICON Light Cluster Switch Bulbs (Other than Active Runway)	X	
8. Over-ride Switch		X (System)
9. Over-ride Switch Bulb	X	

(Continued)

TABLE 1 (Continued)

MALFUNCTION	CONTINUE OPERATION	SUSPEND OPERATION
10. VICON Light Cluster (Active Runway)	X	
11. Microwave Aircraft Detector (Active Runway)		X (At that departure point)
12. Microwave Aircraft Detector (Other than Active Runway)	X	
13. VICON Light Intensity Control	X	

IX. Maintenance Notification

All maintenance on the VICON System will be conducted by the Bradley Comm. Unit, or when notified or called by the Comm. Unit, NAFEC Project team personnel from ANA-430.

All malfunctions of the VICON System should be reported to the Bradley Comm. Unit via the notification procedures presently utilized by the facility.

It is realized that the Comm. Unit has a normal schedule for only 16 hours a day and that period of time between 12:00 pm (midnight) to 08:00 am is covered by "Call-back" service on priority equipments. Because of the priority attached to the VICON evaluation effort, certain VICON equipment failures will require "Call-back" priority. This section lists the malfunctions which are considered to have priority and will require immediate notification and "call-back" of maintenance personnel during the hours not covered by regular schedule. Other malfunctions can be held in abeyance until such time as the Comm. Unit personnel report for duty during their regular scheduled watches.

A. The malfunctions or Equipment outages requiring maintenance call back are as follows:

1.	VICON Control Display Panel	- Complete failure of Switches and Controls.
2.	Runway Activation Switches	- * Active runways only.
3.	VICON Light Cluster Switch	- * End of runway switch, Active runway only.
4.	Microwave Aircraft Detector	- * Active Runways only.
5.	VICON Light Cluster	- * End of runway cluster, active runway only.
6.	Green Lens missing from a Cluster Light	- * End of runway, Active runway only.

* Maintenance call back on equipments for other than an active runway should be made when weather forecasts indicate a probability for a wind shift during the time period when normal maintenance is not available, which would locate a malfunction on a runway likely to be the new active runway.

There are malfunctions not mentioned which are of a priority nature, however, are covered by one of those listed above. Distinction of the actual malfunction could not be specifically recognized by the controller from the monitor capability of the control display panel. Example: If the radio activation system to the end of runway 06 would Malfunction, the green light on the VICON light cluster switch would not come on when depressed and the amber light would return almost immediately. This occurance tells the controller of a malfunction to that light cluster, however, the exact problem would not be known since the same

reaction would be received for a burned out blub in that light cluster, or a malfunction to a relay in the system.

GLOSSARY

This glossary was compiled to promote a common understanding of terms used in conjunction with the VICON Control Display Panel and the operation thereof. It also enhances the understanding between the controller and VICON project team personnel during discussions concerning the VICON Panels or System.

CONTROL DISPLAY PANEL - Any of the control panels which are used by the Air Traffic Controller to control the VICON System from the tower cab. The word display is interjected due to the capability of the panel to display, to the controller, the status of the VICON system.

LAMP TEST - A switch, located upon the face of the Control Display Panel whose purpose is to determine the status of the lamps or bulbs inside the VICON light cluster and Runway Activation Switches. When depressed, all bulbs will light.

MATRIX CONTROL DISPLAY PANEL - The type control display panel which has the runway activation and VICON light cluster switches arranged in rows. Each row of switches corresponds to a runway. (See Figures 2 and 3).

MIMIC CONTROL DISPLAY PANEL - The type control display panel which has runways displayed upon the face of the panel in the shape of the airport. The VICON light cluster switches are located in place on the depicted runways to approximate, as closely as possible, the departure points. (See Figures 1 and 4).

OVER-RIDE - A switch on the control display panels the use of which enables the controller to deactivate (turn off) any VICON light cluster that had been activated.

PRIMARY SELECT (PRI Select) - A control on the VICON control display panel which is used by the controller to select the primary departure point for use of the remote control unit. After selection, the remote control unit primary switch will activate the departure point which has been selected. Only runway end departure points may be selected.

REMOTE CONTROL UNIT - A small light weight unit which can be attached or clipped to the belt or other part of the controllers clothing for the purpose of operating designated light clusters while being mobile and at a point in the tower cab away from the control display panel. This unit has two buttons or switches which can control light clusters at the ends of two runways. The two departure points, referred to as the Primary and Secondary departure points, can be selected by the controller by use of the PRI Select and SEC Select controls on the control display panels.

REMOTE SELECTORS - Two 6 pole switches or controls on the control display panels. These controls determine the operation of the primary and secondary VICON light cluster switches or buttons on the remote control unit. Only runway end departure points can be selected as the primary and secondary departure points.

RUNWAY ACTIVATION SWITCH - There are 6 runway activation switches on the control display panels. These switches determine which VICON light cluster switches may be used and which VICON light clusters on the airport will light when a light cluster switch is depressed.

SECONDARY SELECT (SEC Select) - A six pole switch or control on the control display panels which is used by the controller to designate the secondary departure point for use of the remote control unit. The Secondary departure points are the ends of any runway. Use of this control determins the VICON light cluster which may now be operated by the use of the secondary switch or button on the remote control unit.

VICON - Visual Confirmation of Voice Takeoff Clearance System. A visual signal intended to be used as a confirmation of the Voice takeoff clearance issued by the controller.

VICON LIGHT CLUSTER - Three PAR-56 lights (standard runway threshold lamps). All three lights have green lenses, mounted on a 14 inch high frangible tubes and located along the left side of the runways in line with the edge lights. One of the three lights is aimed across the runway, the second is aimed diagonally down the departure runway, and the third light in the cluster is aimed parallel to the runway to cover that area near the taxiway holding point.

VICON LIGHT CLUSTER SWITCH - The switches on the control panel which turn on the VICON clusters on the runway.

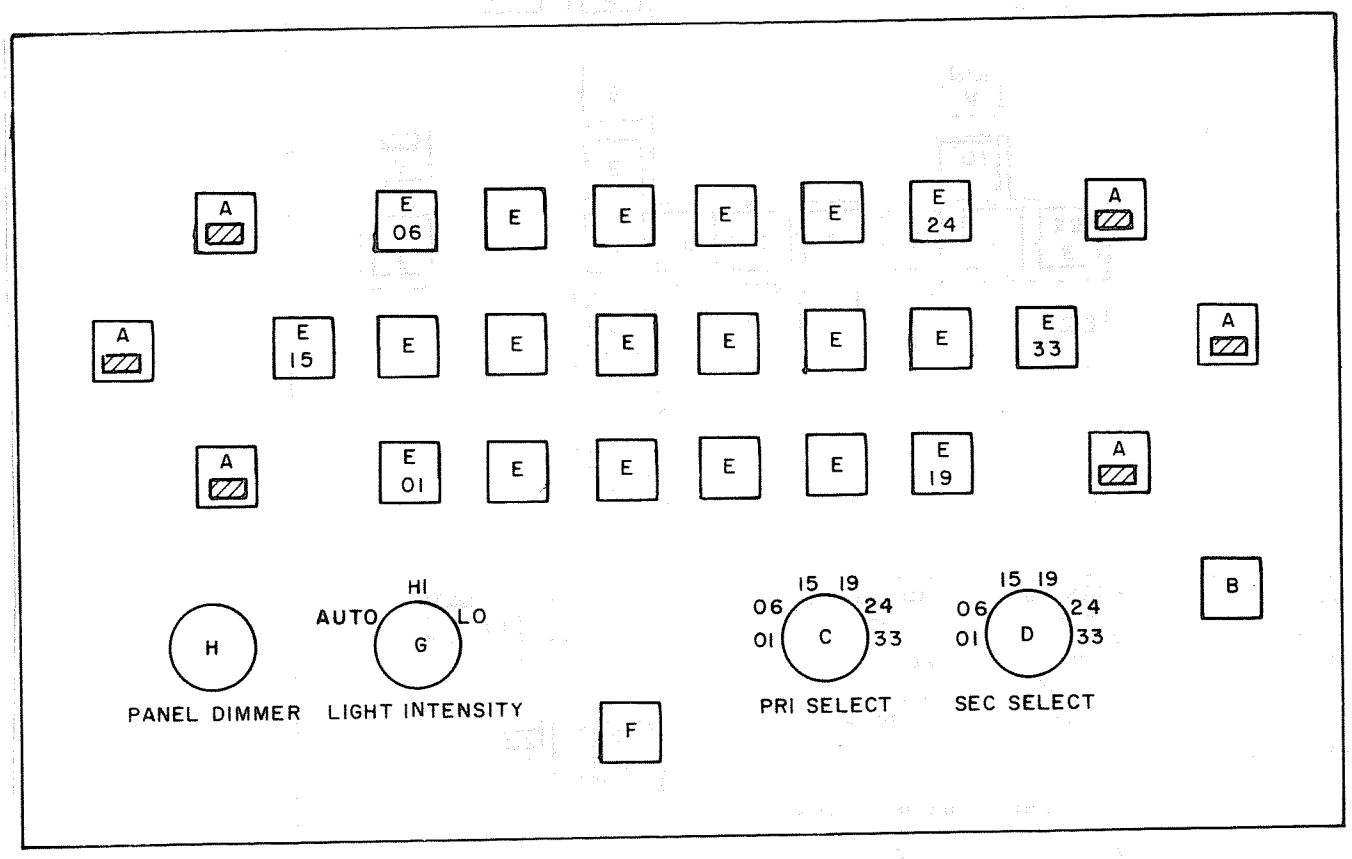

A RUNWAY ACTIVATION SWITCH
B LAMP TEST
C PRIMARY SELECT CONTROL
D SECONDARY SELECT CONTROL
E VICON LIGHT CLUSTER ACTIVATION SWITCH
F OVERRIDE SWITCH
G LIGHT CLUSTER INTENSITY CONTROL
H PANEL LIGHT INTENSITY CONTROL

FIGURE B-1. MATRIX TYPE VICON CONTROL PANEL

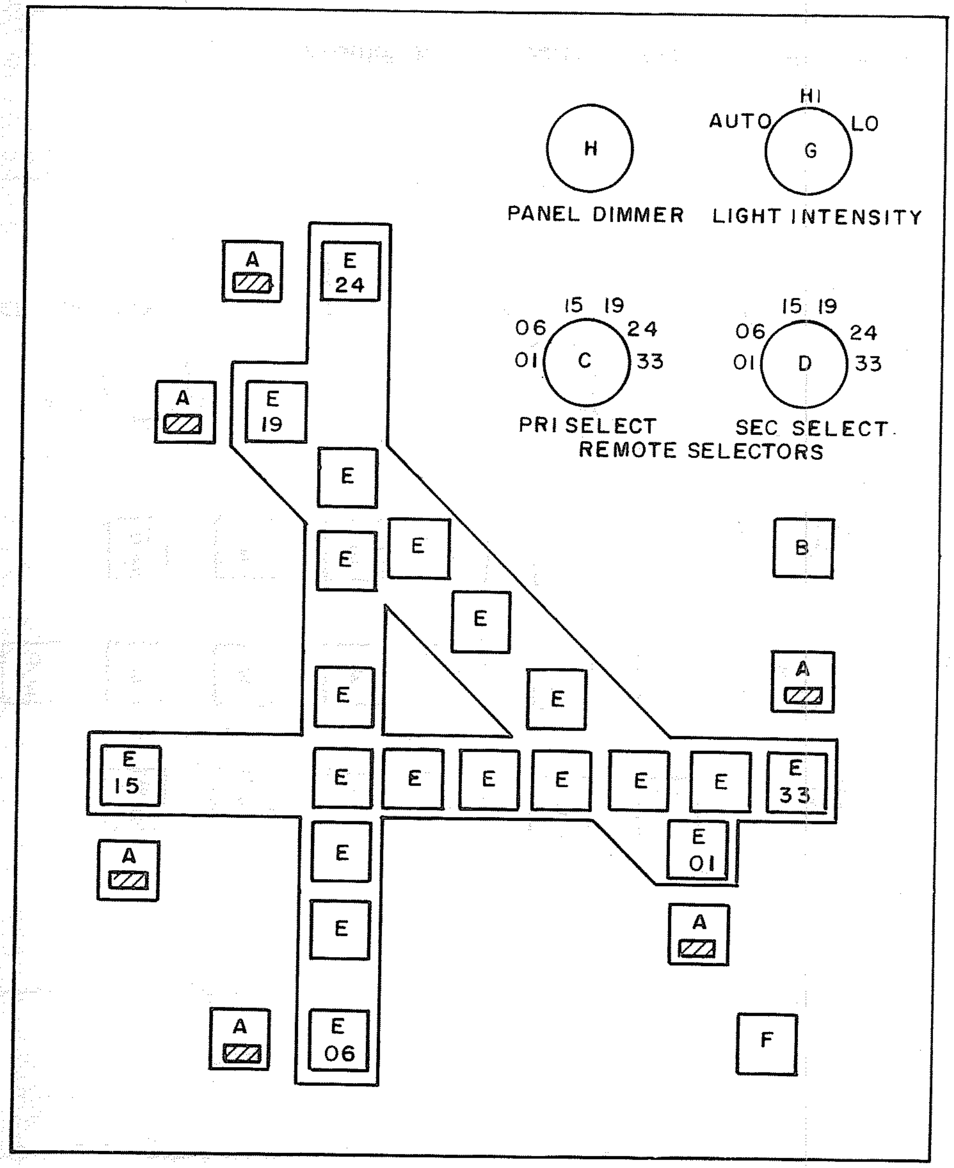

- A RUNWAY ACTIVATION SWITCH
- B LAMP TEST
- C PRIMARY SELECT CONTROL
- D SECONDARY SELECT CONTROL
- E VICON LIGHT CLUSTER ACTIVATION SWITCH
- F OVERRIDE SWITCH
- G LIGHT CLUSTER INTENSITY CONTROL
- H PANEL LIGHT INTENSITY CONTROL

FIGURE B-2. MIMIC TYPE VICON CONTROL PANEL

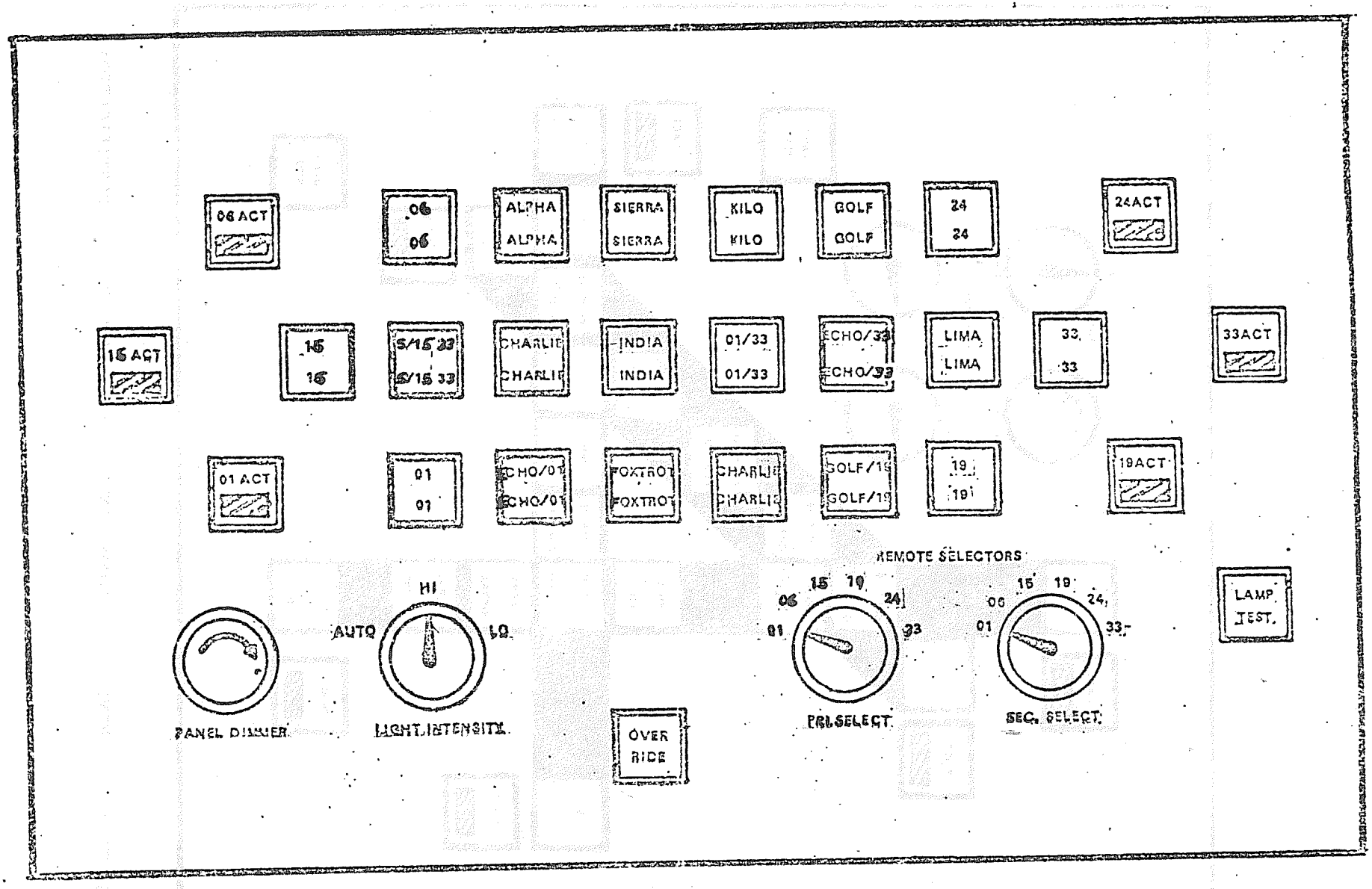

FIGURE B-3. MATRIX TYPE VICON CONTROL PANEL WITH SWITCH IDENTIFICATION

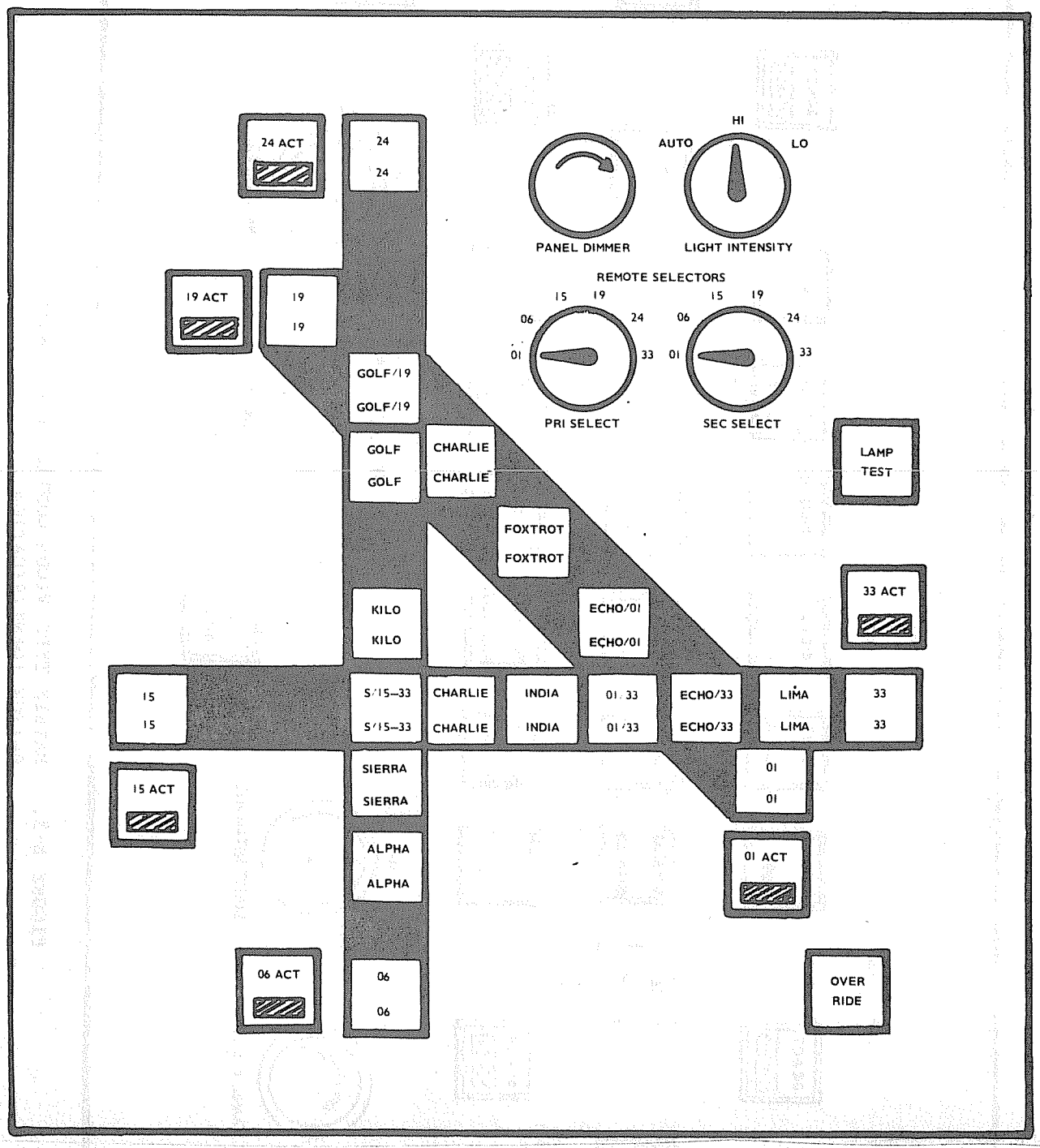

FIGURE B-4. MIMIC TYPE VICON CONTROL PANEL WITH SWITCH IDENTIFICATION

APPENDIX C

TECHNICAL MANUAL FOR OMNI SPECTRA MODEL 300 500-FT-RANGE OUTDOOR MICROWAVE LINK

REPRINTED FROM THE TECHNICAL MANUAL FOR OMNI SPECTRA MODEL 300 500-FT RANGE OUTDOOR MICROWAVE LINK BY PERMISSION OF OMNI SPECTRA SECURITY PRODUCTS DIVISION, 377-300TM

TECHNICAL MANUAL
FOR
OMNI SPECTRA MODEL 300
500 FT-RANGE
OUTDOOR MICROWAVE LINK

Omni Spectra SECURITY PRODUCTS DIVISION

TABLE OF CONTENTS

I. DESCRIPTION
- A. Operation of T/R Link 3
- B. Protection Coverage Pattern 3
- C. Description of Components 3
- D. Optional Equipment 5

II. SPECIFICATIONS
- A. Model 300 T/R Link 6
- B. Power Supply 6

III. INSTALLATION INSTRUCTIONS
- A. Location of Model 300 T/R Link 8
- B. Location of Power Supply 10
- C. Mounting Model 300 T/R Link 10
- D. Mounting Power Supply 10
- E. Connecting Power Supply 10
- F. Connecting Model 300T Transmitter 11
- G. Connecting Model 300R Receiver 11
- H. Modulation Frequency Selection (Transmitter) 11
- J. Alignment 11
- K. Installation Check List 12
- L. Walk Test 12
- M. Final Test 12

IV. WARRANTY INFORMATION
- A. Warranty 15
- B. Returning Equipment Under Warranty 15
- C. Returning Equipment for Non-Warranty Repair 15
- D. Replacement Parts 15

Copyright Omni Spectra Security Products Division, 377-300TM

Printed in USA

I. DESCRIPTION

A. OPERATION

The Model 300 Outdoor Microwave Intrusion Sensor consists of a Transmitter and a Receiver which form a T/R (Transmitter-Receiver) link. The Transmitter radiates amplitude modulated X-band energy which travels to the Receiver where it is detected.

The received energy is amplified and processed so that it causes an alarm relay to be energized. When an intruder enters the beam, received energy is reduced causing the relay to be de-energized, and an alarm occurs. Operation of a typical link is illustrated in Figure 1.

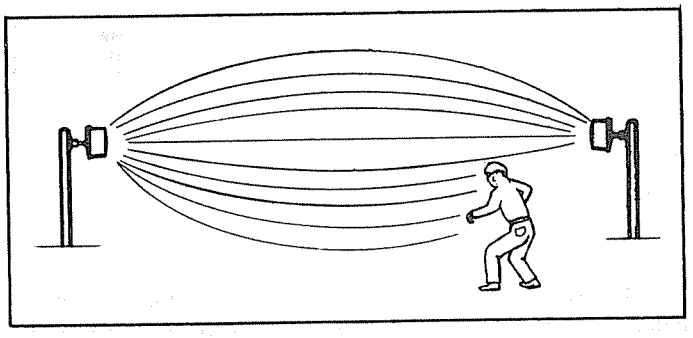

Figure 1

OPERATION OF T/R LINK

A single T/R link may cover any distance of 50 ft (15m) to 500 ft (150m). The Receiver is equipped with an automatic gain control (AGC) circuit which automatically adjusts receiver sensitivity for the distance to be covered. The AGC circuit also compensates for effects of weather and aging of components. The Receiver is designed to respond to human intrusion whether running, walking, or crawling.

B. PROTECTION COVERAGE PATTERN

The typical protection coverage pattern of the Model 300 T/R link is shown in Figures 2 and 3. The typical pattern is approximately 3 ft (1m) in diameter on a 50 ft (15m) link, and approximately 20 ft (6m) in diameter on a 500 ft (150m) link.

The diameter of the protection pattern is a function of the gain (amplification) of the Model 300R Receiver. Because the Receiver employs an automatic gain control circuit, the diameter of the protection pattern is automatically controlled, and therefore **is not field adjustable.**

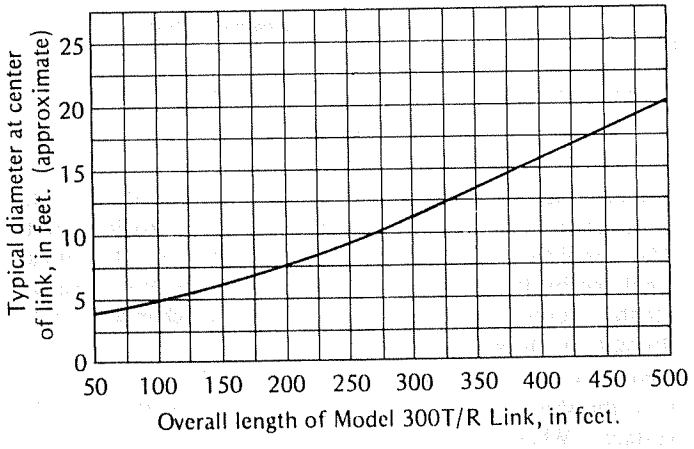

Figure 2

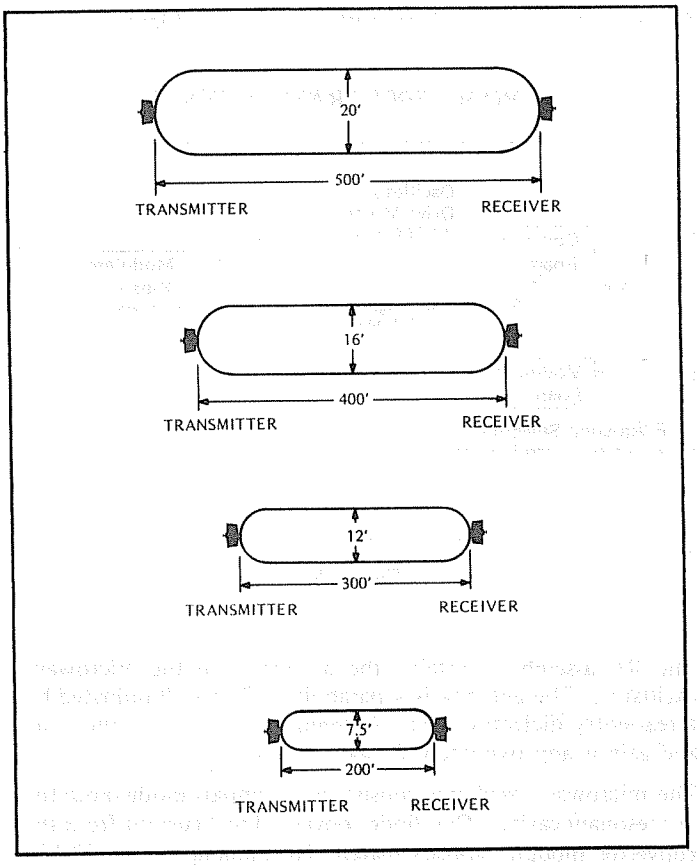

Figure 3

TOP VIEW OF PROTECTION COVERAGE PATTERN

C. DESCRIPTION OF COMPONENTS

The Model 300 Outdoor Microwave Intrusion Sensor, shown in Figure 4, includes:

1 ea. Model 300T — Microwave Transmitter with swivel ball mount.
1 ea. Model 300R — Microwave Receiver with swivel ball mount.
1 ea. Model PS40 or PS41 Power Supply.

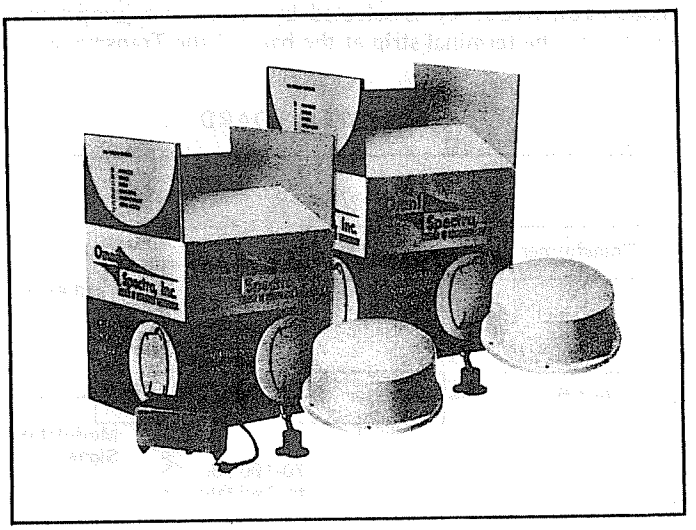

Figure 4
MODEL 300

TRANSMITTER

The Model 300T Transmitter consists of three major subassemblies – RF assembly, converter board and modulator board. A block diagram of the Transmitter is shown in Figure 5.

MODEL 300T TRANSMITTER

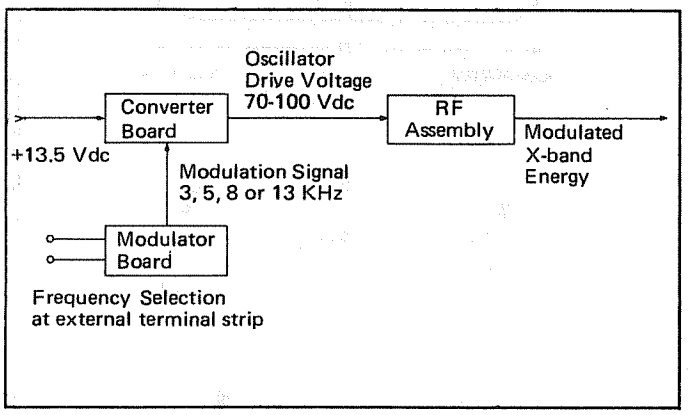

Figure 5

The RF assembly contains the antenna and the microwave oscillator. The antenna is a parabolic reflector illuminated by a rear-entry dielectric feed. Antenna polarization is elliptical, and gain is approximately 23 dB.

The microwave oscillator consists of an Impatt diode mounted in a resonant cavity. This diode converts direct current from the converter module (approximately 40 milliamperes at 70-100 volts) into microwave energy at X-band frequency.

Drive current for the microwave oscillator is supplied by the converter board. This board consists of input voltage regulator, chopper, transformer, rectifier, filter, and output current regulator. In addition, the converter board provides amplitude modulation of the current supplied to the microwave oscillator. This causes the transmitted X-band energy to be amplitude modulated. A block diagram of the converter board is shown in Figure 6.

Modulation frequency and modulation amplitude are controlled by the modulator board. This board contains a Wein-bridge audio oscillator which generates a signal of 3, 5, 8 or 13 KHz. Modulation frequency is selected by means of a jumper wire located on the terminal strip at the back of the Transmitter.

CONVERTER BOARD

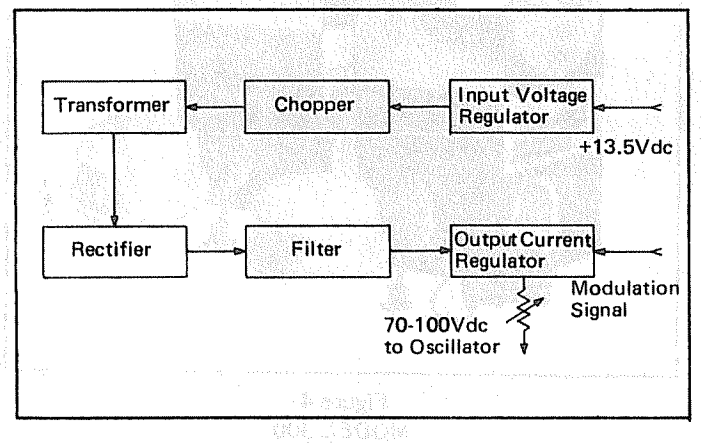

Figure 6

RECEIVER

The Model 300R Receiver consists of two major subassemblies – RF assembly and demodulator board. A block diagram of the Receiver is shown in Figure 7.

MODEL 300R RECEIVER

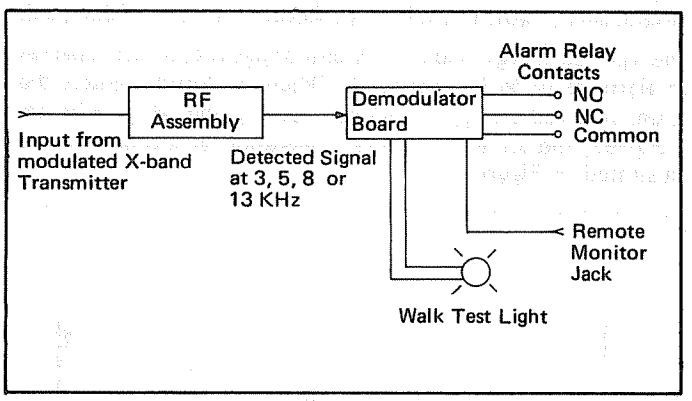

Figure 7

The RF assembly contains the antenna and the microwave detector. The antenna is a parabolic reflector identical to the transmitting antenna. The microwave detector is a Schottky barrier diode mounted in a resonant cavity. This diode converts modulated X-band energy received from the Transmitter into energy at the modulation frequency of 3, 5, 8 or 13 KHz.

The demodulator board consists of preamplifier, AGC amplifier, detector, filter, threshold circuit and alarm relay. A block diagram of the demodulator board is shown in Figure 8.

DEMODULATOR BOARD

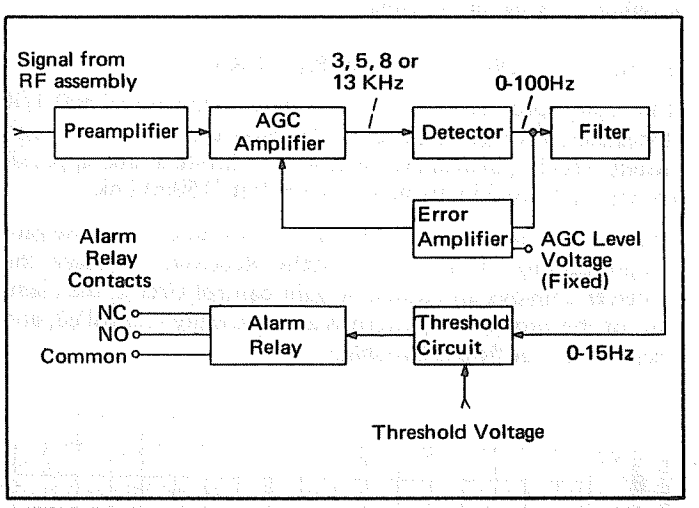

Figure 8

Detected signals from the RF assembly are amplified by a low noise preamplifier. Additional amplification is provided by the AGC amplifier. Gain of the AGC amplifier is automatically regulated by the AGC loop to maintain the output signal at a constant level. The AGC loop corrects for changes in signal strength due to weather effects.

Signal from the AGC amplifier is detected, filtered and applied to a threshold circuit where it is compared with a reference voltage. Whenever signal level falls below reference level the alarm relay is de-energized and an alarm is generated.

POWER SUPPLY

A Model PS40 Power Supply is provided with each Model 300T/R Link. This Power Supply operates from primary supply voltage of 110 volts AC, 50-60 Hz, 0.5A, and furnishes +13.5 volts DC to the Model 300 Transmitter and Receiver.

The Model PS41 Power Supply operating at 220 volts AC, 50-60 cycles, 0.25A is available upon request. The power supply contains automatic switchover and battery charging circuitry for optional standby battery operation. Power Supplies are fused on both the input side and the +13.5 Vdc output side (2.0A fuse), for maximum protection. See Figure 9.

MODEL PS40 OR PS41 POWER SUPPLY

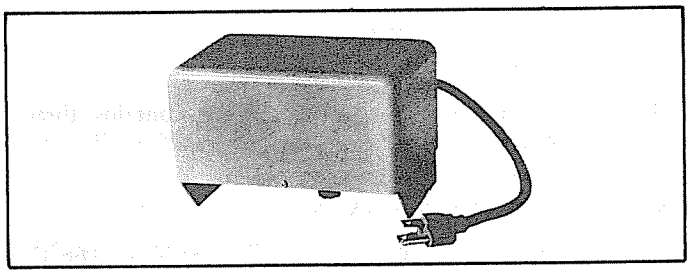

Figure 9

D. OPTIONAL EQUIPMENT

Additional Power Supply may be desired for more convenient installation of Model 300R Receiver. See Figure 23.

Model BA20 Battery is a 12.6 volt, 26 ampere hour, jelly acid type auxiliary power source. In the event of a primary power failure, it is capable of operating the Model 300 Transmitter and Model 300 Receiver for up to 4 hours of continuous operation without recharging. See Figure 10.

MODEL BA20 BATTERY

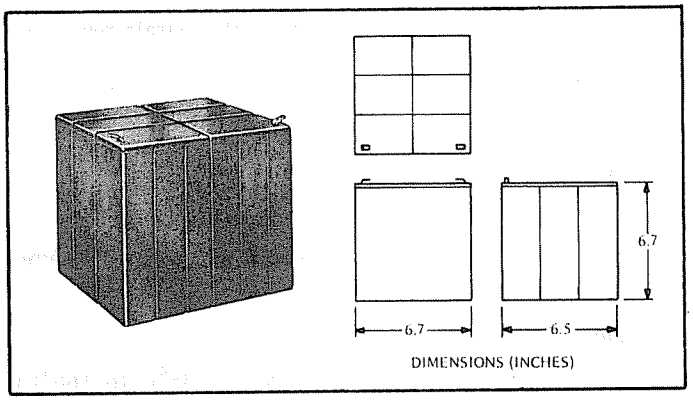

Figure 10

Model RM80 Remote Monitor is a self-contained, battery-powered, audio or visual alarm indicator. It is designed to be used by installers or by a subscriber to remotely monitor the Model 300 T/R Link. See Figure 11.

MODEL RM80 ROMOTE MONITOR

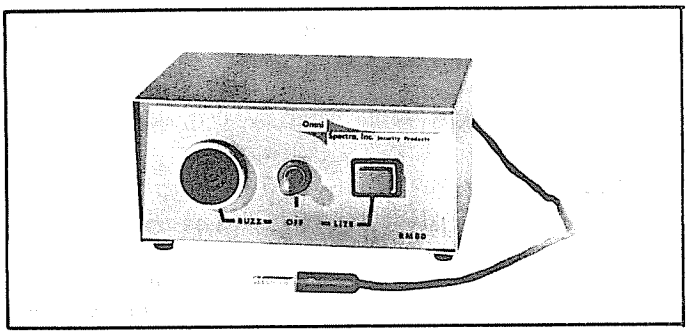

Figure 11

Model MB51 Mounting Bracket provides a convenient means of mounting the Model 300 Intrusion Sensor to walls or structures where right angle mounting is required. See Figure 12.

MODEL MB51 MOUNTING BRACKET

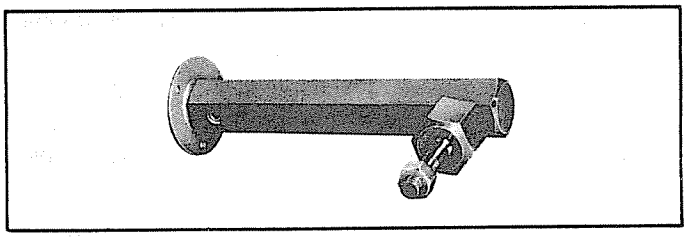

Figure 12

Model MB52 Mounting Bracket provides a convenient means of mounting Model 300T Transmitter or Model 300R Receiver to a 4-inch diameter mounting post. See Figures 13 and 21.

MODEL MB52 MOUNTING BRACKETS

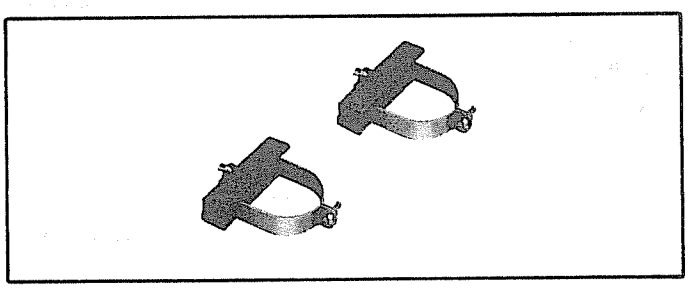

Figure 13

II. SPECIFICATIONS

A. MODEL 300 T/R LINK

1. DETECTION CAPABILITY

a) Range – 50 feet (15m) to 500 feet (150m).
b) Beam Diameter – 3 to 20 feet (1-6m) depending upon range. See Figure 2.
c) Target Size – 0.8 square meter (man).
d) Target Velocity – 0.5 ft/sec to 50 ft/sec (0.15m/sec to 15m/sec)

2. RELIABILITY

a) False Alarm Rate – 1/year/unit based upon signal to noise ratio.
b) Probability of Detection – 0.99 minimum.
c) Self-Supervision (Alarm-on-Failure) – Inherent in design (fully self-supervised).
d) Cross Modulation – Cross Modulation is 25 dB below primary power level.
e) Automatic Range Adjustment – Unit will automatically adjust to slow changes in path loss due to rain, snow, etc. AGC range is 50 dB. Attack rate is 3 dB/sec. Recovery rate is 7.5 dB/min.

3. TRANSMITTED SIGNAL

a) Radiated Power – 10 milliwatts nominal, 50% double sideband amplitude modulated.
b) Carrier Frequency – X-band (U.S.A. 10.525 GHz ± 25 MHz)
c) Modulation Frequency – 3, 5, 8, or 13KHz ± 10%, field selectable.
d) Spurious Emissions – All spurious signals including harmonics at least 50 dB below fundamental when measured at 100 feet from transmitter.
e) Interference Immunity – Unit will operate without degradation in the presence of white noise.
f) Applicable Specifications (USA) – Radiation characteristics described above conform to FCC rules, Part 15, amended August 18, 1971, and to U.L. Specification 639-1969.

4. POWER REQUIREMENT

Requires DC power supply, Model PS40 or PS41.

a) Voltage – 11 to 14 Vdc.
b) Current – 1.0 amp maximum.
c) Noise – Total noise, ripple, and transients less than 50 millivolts P-P.
d) Fuses – Model 300T 1 amp, Model 300R 0.5 amp.

5. ALARM INDICATION

a) Relay Contacts – Primary alarm indication is provided by alarm contacts – One normally open contact, one normally closed contact, one common terminal. Contact rating is 2 amp at 28 volts DC.
b) Walk Test Light – Secondary alarm indication is given by walk test light located on back plate of Receiver.
c) Remote Monitor – Jack supplied for Model RM80 Remote Monitor. Remote Monitor generates audible tone or light upon alarm.
d) Tamper Switch – Normally open or closed contacts rated at 10.0 amp at 28 volts DC.

6. SIZE AND WEIGHT

Model 300T Transmitter and Model 300R Receiver have the following specifications.

a) Diameter – 10.7 in (27cm)
b) Depth – 8.7 in (23cm)
c) Weight – 5 lbs (2.3Kg)

7. MOUNTING

Ball swivel supplied. Swivel base plate contains three 3/16 in (.47cm) diameter holes spaced in 2.0 in (5.1cm) diameter bolt circle.

8. OPERATING ENVIRONMENT

a) Temperature – -30°F to +150°F (-35°C to +66°C)
b) Relative Humidity – 0 to 100%
c) Vibration – Unit requires stable mounting surface essentially free of vibration in the frequency range of 0.1 to 30Hz.

B. POWER SUPPLY

1. AC INPUT

	PS40	PS41
a) Frequency	50 to 60 Hz	50 to 60 Hz
b) Voltage	102 Vac to 132 Vac	204 Vac to 264 Vac
c) Current	0.4 amp max.	0.2 amp max.
d) Fuse	1.0 amp Slo-Blo	0.5 amp Slo-Blo

e) Cord – 6 ft (1.8m) long, male plug, strain relief for 4 ft (1.2m) fall.

2. DC OUTPUT

a) Voltage – 13.5 Vdc to 13.8 Vdc.
b) Current – 1.6 amp maximum.
c) Ripple and Noise – 50 millivolts P-P maximum.
d) Current Limit – Automatic current limit to 1.6 amp.
e) Fuse – 2.0 amp.

3. OPERATING ENVIRONMENT

a) Temperature – -30°F to +150°F (-35°C to +66°C)
b) Relative Humidity – 0 to 100%. Rain resistant per U.L. 639.

4. SIZE AND WEIGHT

a) Length – 7.0 in (18cm)
b) Width – 5.1 in (13cm)
c) Depth – 5.3 in (13cm) including mounting bracket.
d) Weight – 6 lbs (2.7Kg)

OUTLINE DRAWING FOR MODEL 300T TRANSMITTER AND MODEL 300R RECEIVER

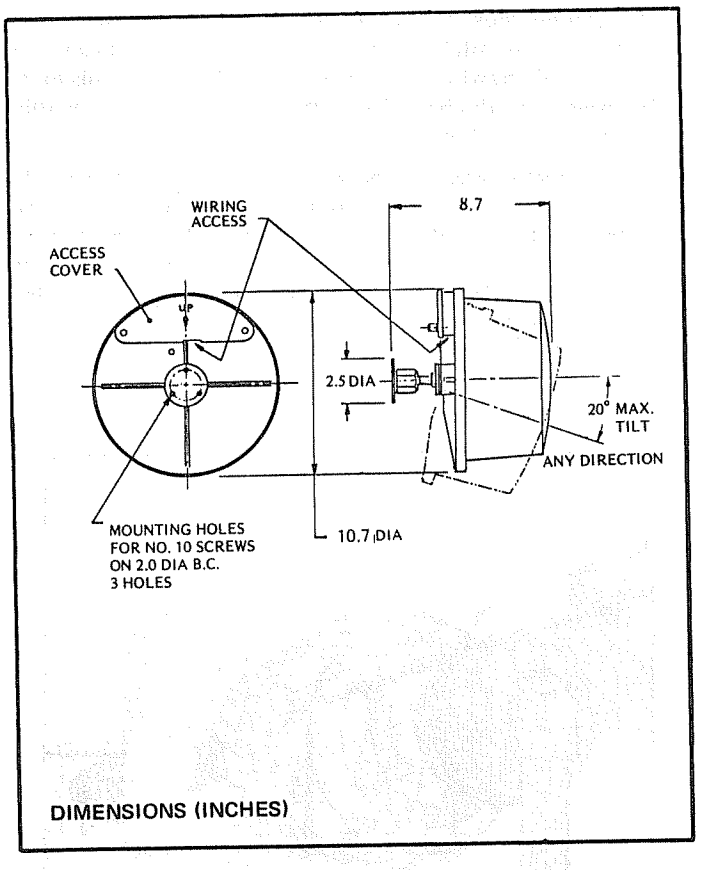

Figure 14

OUTLINE DRAWING FOR MODEL PS40 OR PS41 POWER SUPPLY

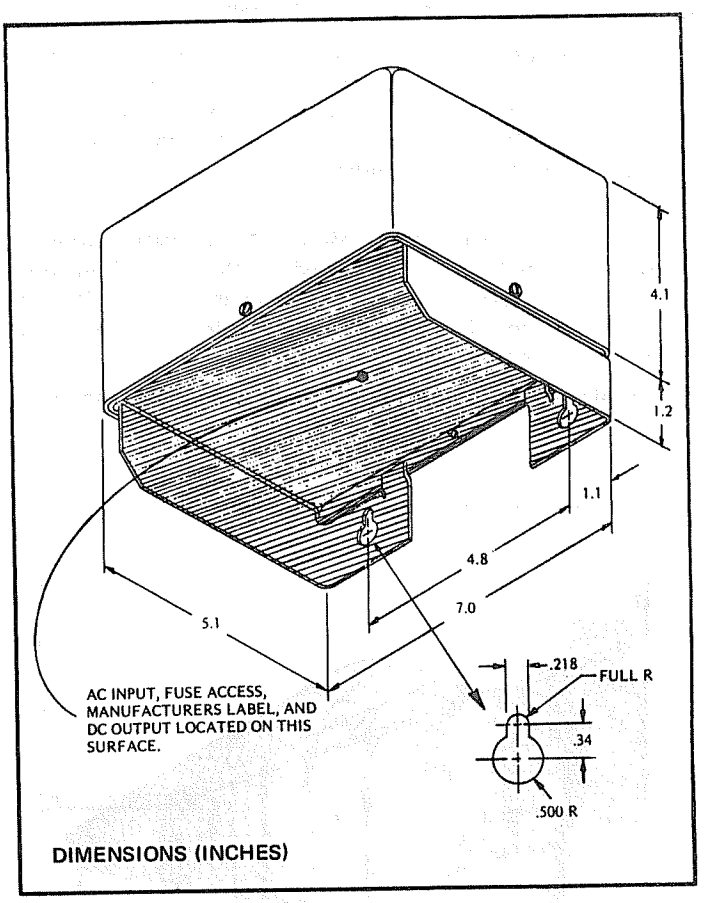

Figure 15

III. INSTALLATION INSTRUCTIONS

A. LOCATION OF MODEL 300 T/R LINK

1. **Required Area.** The Model 300 T/R Link must be located in an area which is free of moving objects such as chain link fences, trees, bushes and large areas of water. See Figure 16. Large moving objects within the protection pattern will be indistinguishable from an intruder and will cause false alarms.

   The clear area required for a Model 300 installation depends upon the distance to be covered by the link. Protection patterns for various distances are given in Figure 3. In each installation the cleared area must be at least as large as the protection pattern.

2. **Terrain.** Since operation of the Link requires transmission of energy from Transmitter to Receiver, it is important to maintain a clear line of sight between the units. Therefore, the ground must be flat across the protected area. Any bumps, hills or ditches in the area will shadow the beam and may provide crawl space for an intruder. Bumps or hills must be leveled, and ditches filled so that the area is flat to within six (6) inches (14cm). See Figure 17.

   The protected area can be any stable, reasonably smooth material such as concrete, asphalt, tilled earth, or gravel. If there is grass or vegetation in the protected area, it must be kept cut to a maximum of three (3) inches (8cm) in height. A Model 300 T/R Link should not be operated over open water.

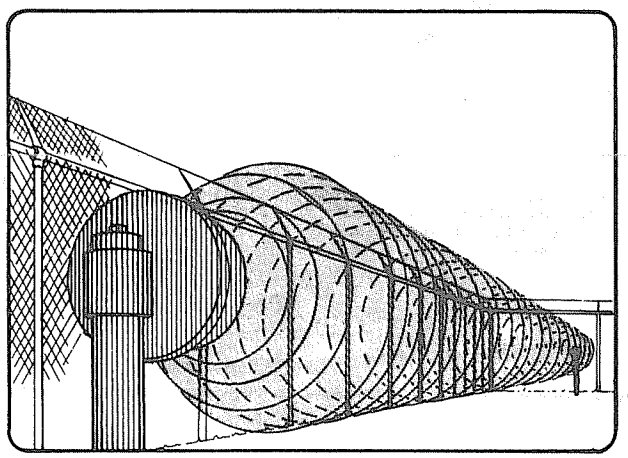

DO

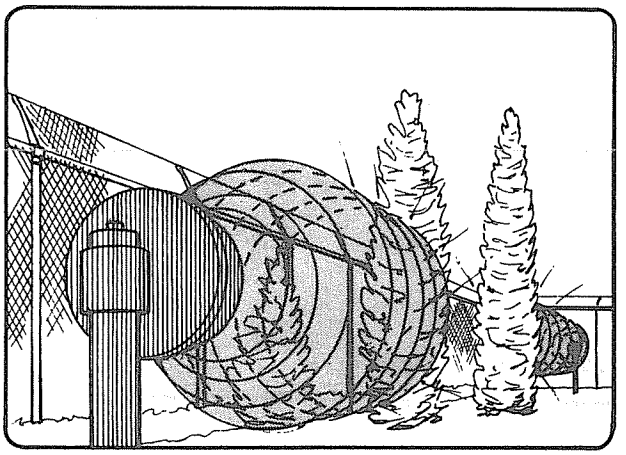

DON'T

Figure 16

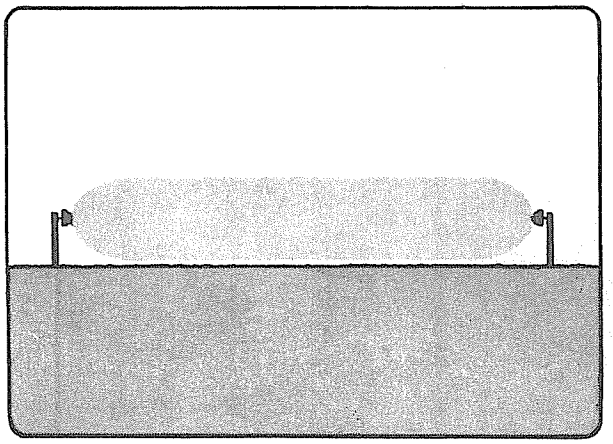

DO

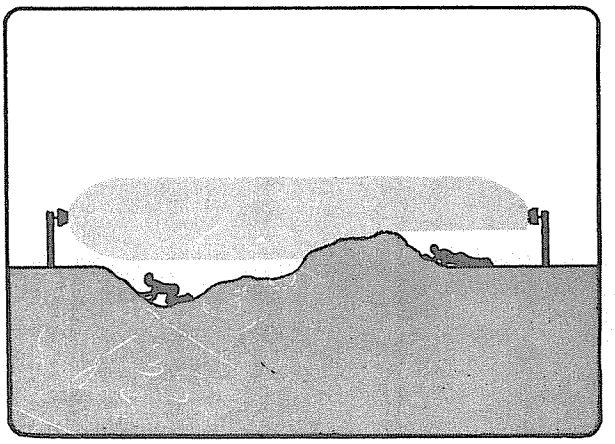

DON'T

Figure 17

3. **Physical Protection.** Install the Transmitter and Receiver in locations which provide protection from accidental damage as well as from tampering. Simple devices such as bumper posts or parking guards may be used to protect equipment from damage from vehicles. See Figure 18.

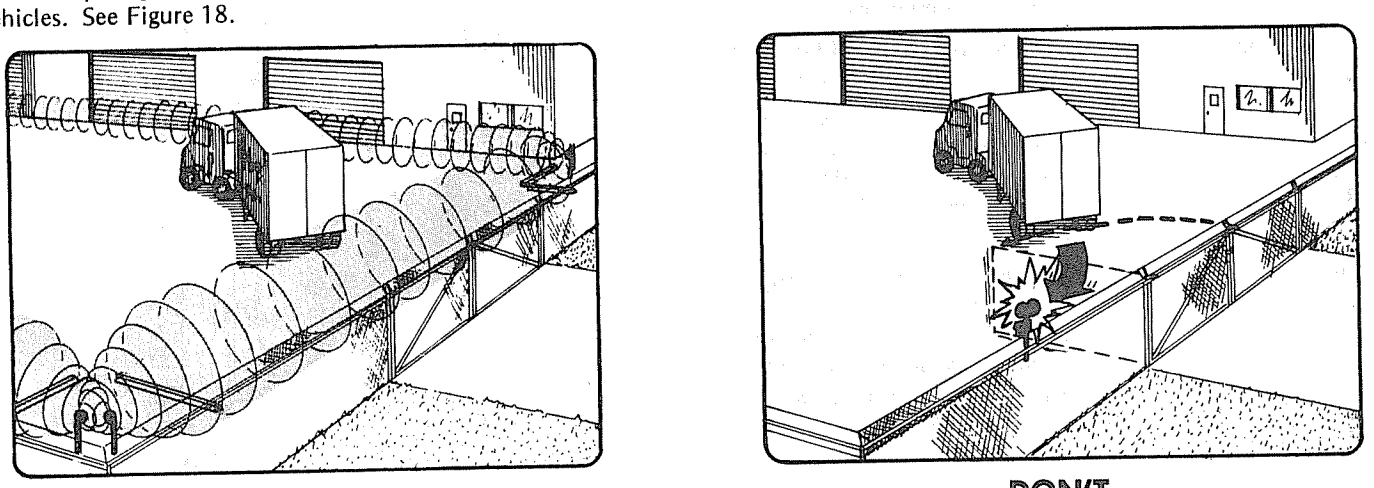

DO

DON'T

Figure 18

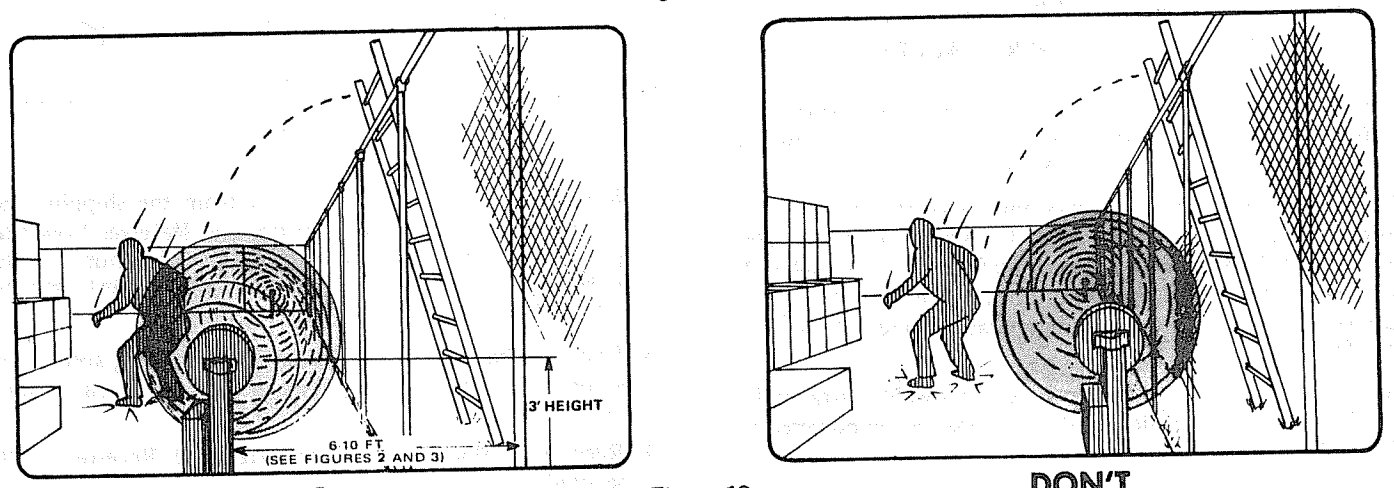

DO

DON'T

Figure 19

4. **Best Security.** Choose the location that will provide the best security, yet be free from false alarms. Always locate the Model 300 inside a fence or inside a controlled access area to prevent unwanted alarms due to random foot traffic, vehicles, or large animals. Units should be mounted three feet (adjustable) above ground level, and far enough inside fence to provide a clear area of protection. See Figures 2, 3 and 19.

For maximum security it is necessary to overlap the ends of links so that the dead spot below and immediately in front of the adjoining link is protected. This type of location gives maximum possible security. A 30 foot (9m) overlap is recommended at intermediate points, and a 15 foot (4.6m) offset is recommended at corners.

Note from Figure 20 that at each point of overlap either two Transmitters or two Receivers should be installed. This arrangement prevents an adjacent Transmitter and Receiver from establishing an unwanted link across the short overlap distance.

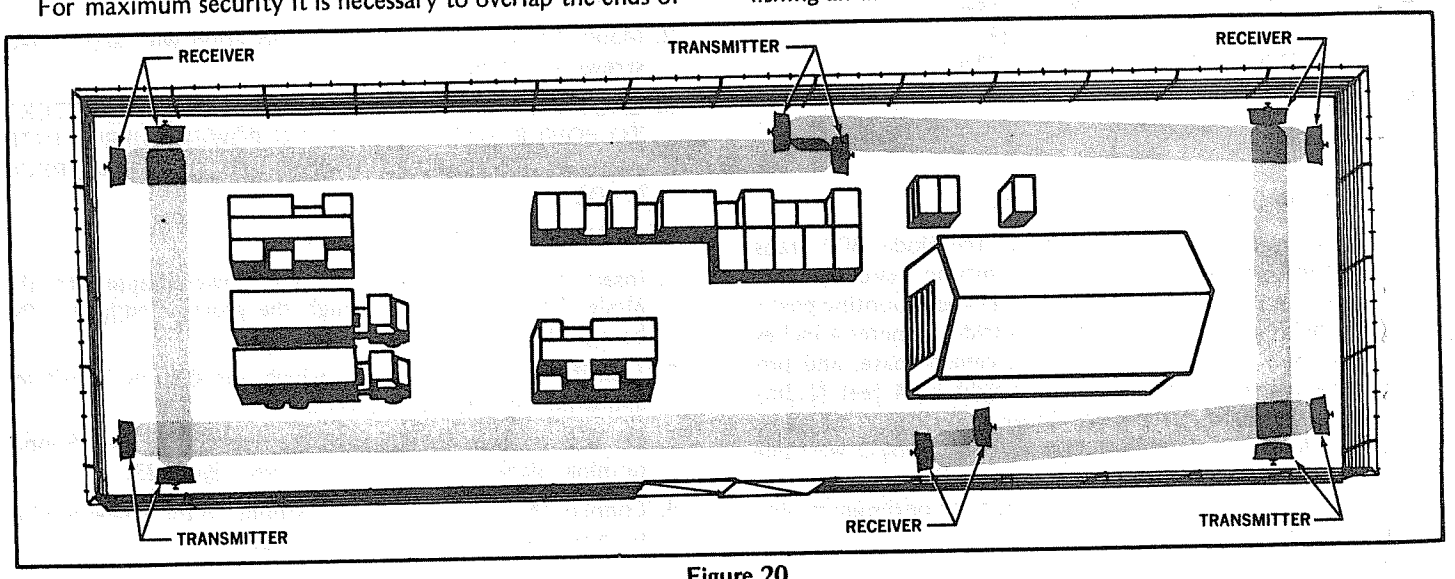

Figure 20

B. LOCATION OF POWER SUPPLY

Select a convenient location for mounting the Power Supply. The location must meet the following requirements.

1. Power Supply requires outlet which is "HOT" 24 hours per day. (Customer does not turn circuit breaker off at night.)
2. Mount the Power Supply as close to the Model 300T Transmitter as possible, because the Transmitter requires considerably more current than the Receiver. The Model 300T Transmitter consumes 0.85 amp and the Model 300R Receiver consumes 0.15 amp.
3. The maximum allowable distance between the Power Supply and Transmitter and Receiver, as a function of wire size, is shown in Table I. The Model 300 Transmitter and Receiver will operate properly with an input voltage in the range of 11.0 Vdc to 14.0 Vdc (measured at the respective units under load). Table I is based on this requirement.

TABLE I

RECOMMENDED WIRE GAUGES

Column "A" represents the maximum allowable distance for proper operation of a Model 300T Transmitter when powered by a Model PS40 or PS41 Power Supply only.

Column "B" represents the maximum allowable distance for proper operation of a Model 300T Transmitter when powered by a Model PS40 or PS41 Power Supply and a Model B-20 standby battery, and requiring up to 4 hours of standby battery operation through the temperature range of -30°F to +150°F.

Column "C" represents the maximum allowable distance for proper operation of a Model 300R Receiver when powered by either of the above power sources.

WIRE GAUGE	"A" POWER SUPPLY TO TRANSMITTER DISTANCE	"B" POWER SUPPLY WITH OPTIONAL BATTERY TO TRANSMITTER DISTANCE	"C" POWER SUPPLY TO RECEIVER DISTANCE
#20	100 Ft (30m)	45 Ft (14m)	500 Ft (152m)
#18	175 Ft (53m)	70 Ft (21m)	750 Ft (228m)
#16	300 Ft (91m)	120 Ft (37m)	1000 Ft (300m)
#14	475 Ft (145m)	180 Ft (55m)	
#12	750 Ft (228m)	300 Ft (91m)	
#10	1100 Ft (334m)	500 Ft (152m)	

See Figure 23.

C. MOUNTING MODEL 300 T/R LINK

1. Prepare a rigid mounting surface for the Model 300 Transmitter and Receiver. Do not mount units on a cyclone fence or any vibrating surface. A recommended mounting post is a 3½ inch (9cm) galvanized pipe (outside diameter 4 inches, 10cm), sunk into the ground in a cement base, and protruding above ground level to a height of 4 feet (1.2m). Mount the Transmitter and Receiver 3 feet (1m) above ground level and allow for height adjustment of at least plus or minus 4 inches (10cm). Height adjustment may be required during final alignment to achieve optimum protection pattern. See Figure 21.

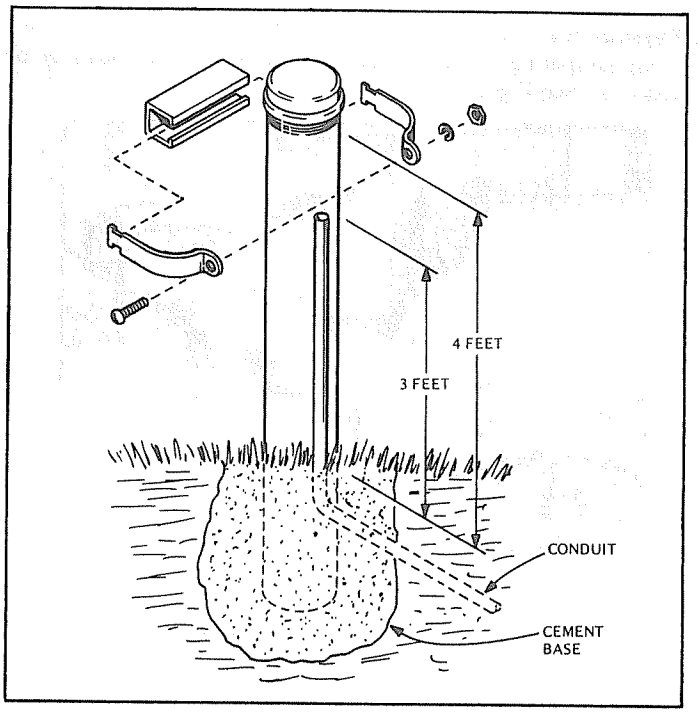

Figure 21

2. Remove the Model 300T/R Link from the shipping containers. Separate the Transmitter and Receiver from their swivel ball-joint mounts by turning the large nuts counterclockwise. Large nuts require 1¼ inch (32mm) open end wrench.
3. Place the ball mount flange on the mounting surface and secure with appropriate screws or fasteners using all three (3) mounting holes.
4. Reconnect Model 300 Transmitter and Receiver to the secured ball mount flanges.
5. Rotate the Model 300 Transmitter and Receiver so that the "up" arrows located on the rear of the units are pointing straight up.
6. Tighten the large nuts on the ball mounts to hold the units in place.

D. MOUNTING OF POWER SUPPLY

1. Remove cover from Power Supply by removing four (4) Phillips screws from base of cover.
2. Mount Power Supply at selected location with appropriate screws or fasteners.
3. CAUTION: DO NOT CONNECT STANDBY BATTERY TO POWER SUPPLY, OR PLUG POWER SUPPLY INTO AC OUTLET UNTIL ALL CONNECTIONS HAVE BEEN MADE.

E. CONNECTING POWER SUPPLY

1. Insert two wires connecting the Power Supply to the Model 300 Transmitter through the grommeted hole in the base of the Power Supply.
2. Identify the two wires as to which one shall be "Positive" and which one shall be "Ground".
3. Connect the wire identified as Positive to the Power Supply terminal identified as +13.5 Vdc. See Figure 23.
4. Connect the wire identified as Ground to the Power Supply terminal identified as GND. See Figure 23.

5. If optional standby battery (Model B20) is used, prepare wiring as shown in Figure 23. Crimp type connectors are supplied with battery. CAUTION: DO NOT CONNECT WIRES TO BATTERY AT THIS TIME. SEE FOLLOWING INSTRUCTIONS.
6. Battery wires should be inserted through grommeted hole in base of Power Supply, and connected to Power Supply as shown in Figure 23.
7. Replace cover on Power Supply and secure with screws. CAUTION: DO NOT APPLY POWER TO POWER SUPPLY UNTIL ALL WIRE CONNECTIONS HAVE BEEN MADE. SEE FOLLOWING INSTRUCTIONS.

F. CONNECTING MODEL 300T TRANSMITTER

1. Remove the access cover from the rear of the Model 300T Transmitter by loosening the knurled thumb screws. The thumb screws are captured and will remain attached to the access cover.
2. Insert interconnecting power wires and optional tamper circuit wires through nylon strain relief strap loop located inside terminal strip housing. Locate wires so that they will enter terminal strip housing through wire entrance groove in base of housing. Leave enough slack in wires so that Transmitter may be tilted after access cover is replaced.
3. Secure nylon strain relief strap around wires by pulling free end to close the loop. Cut off and discard end. The nylon strain relief strap employs a one-time use locking action. DO NOT reuse the strap if it has been forced open.
4. Make connections to the terminal strip according to labeled terminal functions and according to instructions in the following sections. See Figure 23. If access to the terminal strip is restricted, measure required wire length for attachment with the terminal strip in the "up" position, then remove the Model 300T Transmitter from the ball-joint mount flange and attach connecting wires.
5. Attach power wires to terminal in red area identified as +13.5V (Positive) and GND (Negative). See Figure 23. OBSERVE POLARITY.
6. For protection against unauthorized openings or tampering, a tamper switch with a separate set of contacts is provided. Closed circuit tamper contacts (open upon removing radome or access cover) are available at "Tamper Switch" Com. and N.C. Terminals. NOTE: If open circuit tamper switch is desired, it is necessary to remove the radome, and move the gray wire to the normally closed terminal on the tamper switch.

G. CONNECTING MODEL 300R RECEIVER

1. The Model 300R Receiver is powered by the PS40 or PS41 Power Supply. See Figure 23.
2. When using one Power Supply to power both the Transmitter and Receiver, connect Receiver with wire size indicated in Column "C" of Table I.
3. The purchase of a second Power Supply (optional) will relieve the necessity of running a pair of power wires between the Model 300T Transmitter and the Model 300R Receiver. See Figure 24 for comparison.
4. Remove the access cover from the rear of the Model 300R Receiver by loosening the knurled thumb screws. The thumb screws are captured and will remain attached to the access cover.
5. Insert interconnecting Power Supply wires and alarm circuit wires through nylon strain relief strap loop located inside terminal strip housing. Locate wires so that they will enter terminal strip housing through wire entrance groove in back of housing. Leave enough slack in wires so that Model 300R Receiver may be tilted after access cover is replaced.
6. Secure nylon strain relief strap around wires by pulling free end to close the loop. Cut off and discard end. The nylon strain relief strap employs a one-time use locking action. DO NOT reuse the strap if it has been forced open.
7. Make connections to the terminal strip according to labeled terminal functions and according to instructions in the following section. See Figure 23. If access to the terminal strip is restricted, measure required wire length for attachment with the terminal strip in the "up" position, then remove the Model 300R Receiver from the ball-joint flange and attach connecting wires.
8. Attach Power Supply wires to terminal in red area identified as +13.5V (Positive) and GND (Negative). See Figure 23. OBSERVE POLARITY.
9. Attach alarm circuit wires as follows:

   CLOSED CIRCUIT ALARM contacts (open on alarm) available at "Alarm Relay" Com. and N.C. terminals.

   OPEN CIRCUIT ALARM contacts (close on alarm) available at "Alarm Relay" Com. and N.O. terminals.

   CLOSED CIRCUIT TAMPER contacts (open upon removing radome or access cover) available at "Tamper Switch" Com. and N.C. terminals. If open circuit tamper switch is desired, it is necessary to remove the radome and move the gray wire to the normally closed terminal on the tamper switch.
10. After checking that power wires, alarm circuit wires and tamper wires are secure and correct, plug power supply cord into AC outlet. Connect wires to Model B20 standby battery, if used. OBSERVE POLARITY.

H. MODULATION FREQUENCY SELECTION (TRANSMITTER)

The Model 300T Transmitter features four (4) field selectable modulation frequencies. It is advantageous to use different modulation frequencies on links operating within close proximity. Different modulation frequencies reduce the possibility of cross link modulation or mutual interference.

1. Modulation frequencies of 3, 5, 8 and 13 KHz are available by selection on the rear of the Model 300T Transmitter. See Figure 22.
2. Select a modulation frequency that is different from the modulation frequencies of other links operating in the immediate area.
3. Attach jumper wire to the appropriate terminal to select the desired modulation frequency. See Figure 22.

J. ALIGNMENT

Adjust the Transmitter and Receiver so that they are pointing directly at each other. Within three (3) minutes the Receiver will stabilize and the walk test light located on Receiver back plate will be extinguished. The link is now ready for walk test.

Note that because of the internal Automatic Gain Control (AGC) circuit, **no Receiver sensitivity adjustment is required.**

The simple alignment described above will provide very nearly (within 2 dB) optimum alignment. More precise alignment can be obtained by removing Receiver radome and connecting AC voltmeter between test point one and ground on Receiver circuit board. A voltage of 27mV P-P minimum should be observed. This voltage will increase to its maximum value when the link is perfectly aligned.

K. INSTALLATION CHECKLIST

- ☐ 1. Transmitter and Receiver are installed on firm supports and aimed directly at each other.
- ☐ 2. Connecting cables have been installed and are secured to the Model 300T Transmitter and Model 300R Receiver by the strain relief straps.
- ☐ 3. Alarm relay wires have been connected as shown in Figure 23.
- ☐ 4. Tamper switch wires are connected as shown in Figure 23.
- ☐ 5. Both Model 300T Transmitter and Model 300R Receiver are mounted with indicating arrows pointing "up".
- ☐ 6. Access covers have been reinstalled and are secure.
- ☐ 7. Power Supply is plugged into continuously "HOT" outlet.

L. WALK TEST

Preliminary walk tests should be conducted approximately midway between the Transmitter and Receiver. The Receiver AGC automatically adjusts to cause the link to go into an alarm condition at the point of entry of a moving target into the protection zone. Continuous movement within the protection zone may or may not cause a continuous alarm from the Receiver. The effective width of the protection zone should compare approximately with Figure 3.

Inability to obtain the specified protection zone may be due to either misalignment of the Transmitter or Receiver, or due to the particular mounting height of the Transmitter or Receiver. Check to insure the Transmitter and Receiver are aligned. If this does not give the required coverage, move the units up and down a few inches.

All tests should be made under actual operating conditions.

M. FINAL TEST

- ☐ 1. Tighten ball mount lock nuts securely.
- ☐ 2. Pull power cord out of electrical outlet to test switchover to standby battery, if used. Switchover should not cause system to alarm **when battery is properly charged.**
- ☐ 3. Recheck protection with walk test.
- ☐ 4. Test locally under actual operating conditions prior to complete system hookup.

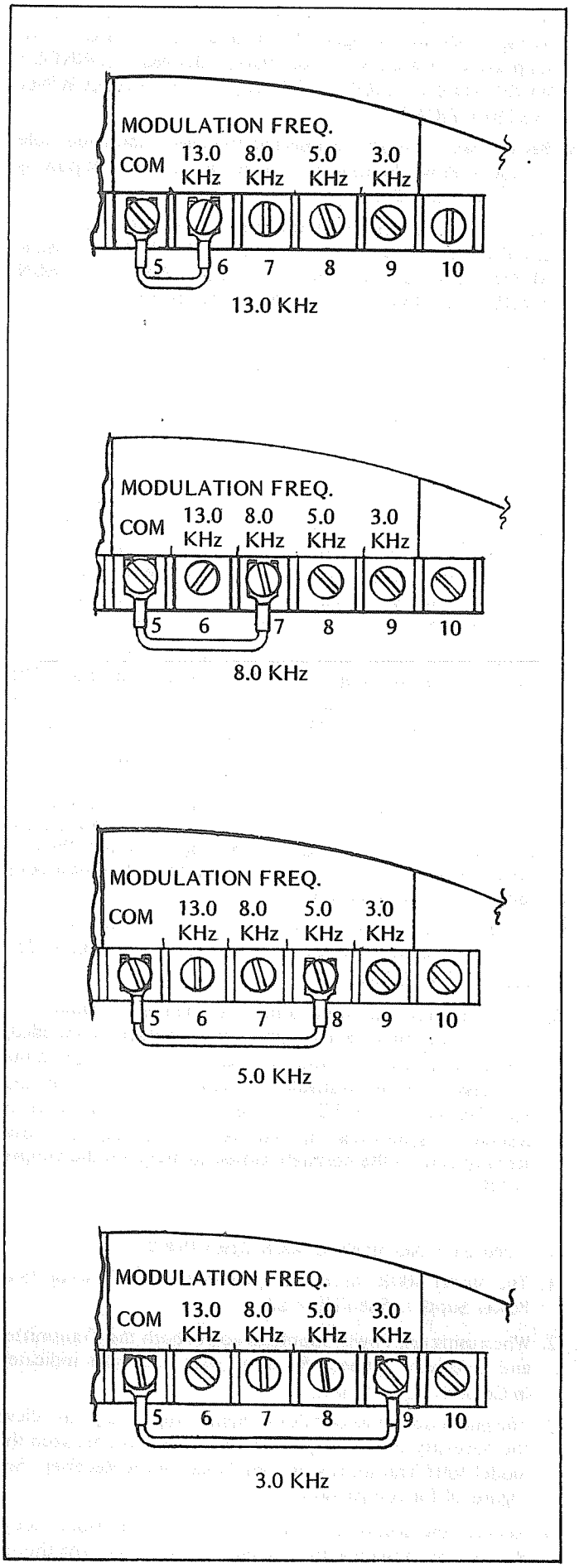

Figure 22

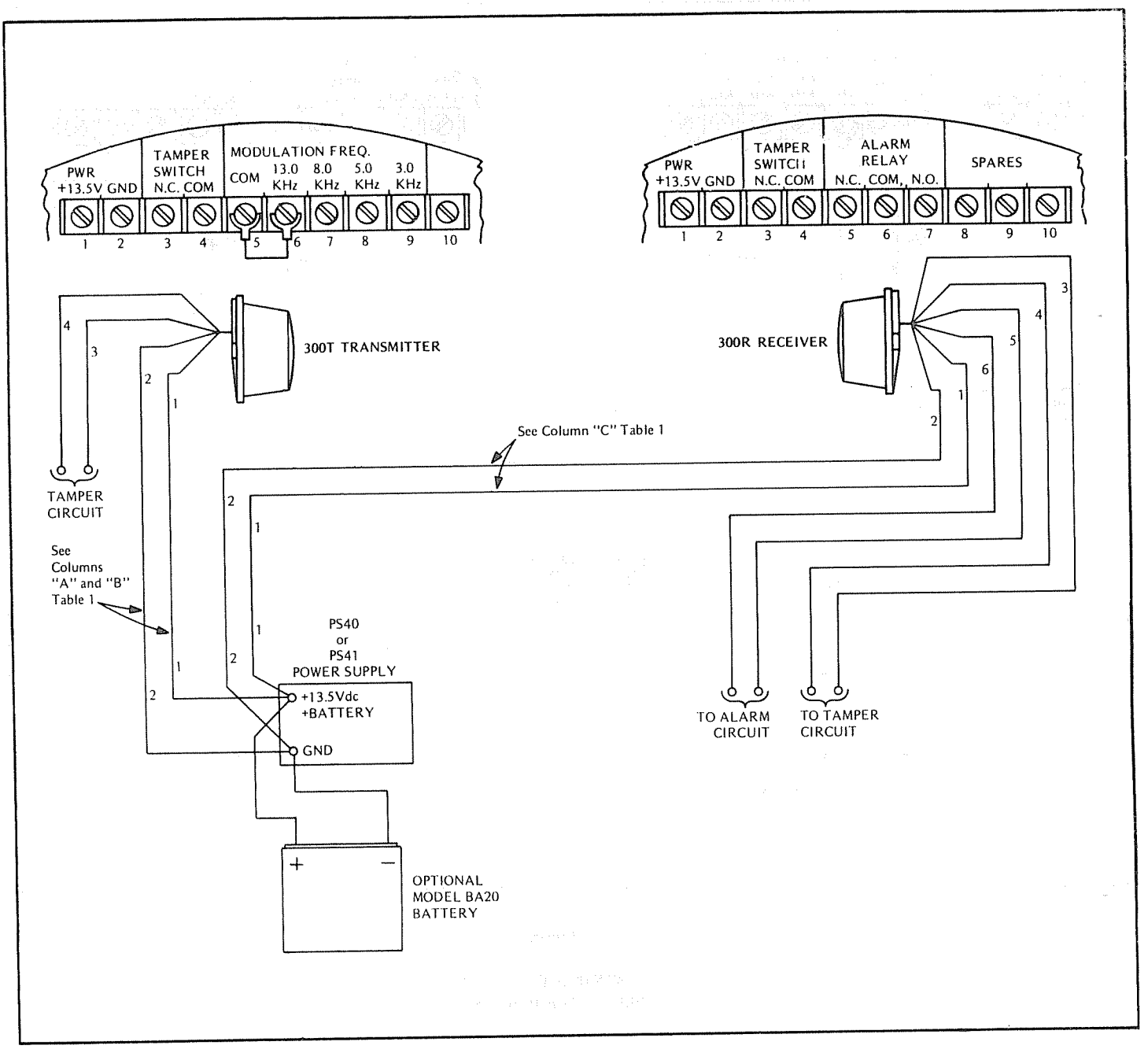

Figure 23

WIRING DIAGRAM

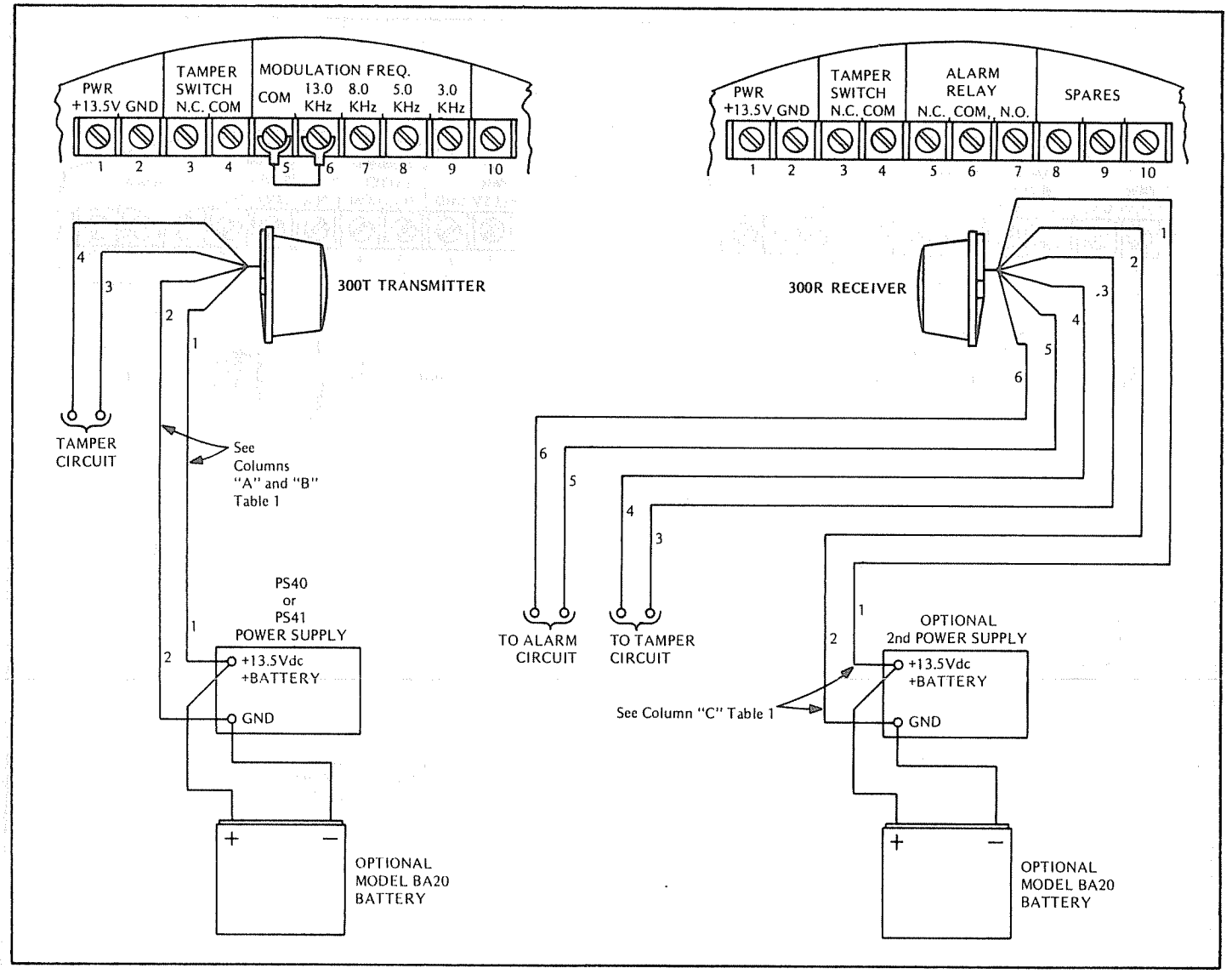

Figure 24

WIRING DIAGRAM
Utilizing 2nd Power Supply

IV. WARRANTY INFORMATION

WARRANTY

OMNI SPECTRA, INC. warrants each of its Security Products to be free from defects in materials and workmanship. The limit of liability under this warranty is to repair or replace any Security Product or part thereof which shall within one year after delivery to the original user, be returned, shipping costs prepaid and insured, to OMNI SPECTRA, INC., at its plant in Tempe, Arizona, or authorized Warranty Service Company, and which shall have been found to be defective upon examination by OMNI SPECTRA, or authorized Warranty Service Company.

This warranty shall be limited to the repair or replacement of OMNI SPECTRA equipment and shall not extend to any incidental or consequential damages therefrom. Disassembly of any Security Product by anyone other than an authorized representative of OMNI SPECTRA, INC., voids the obligations of OMNI SPECTRA, INC., to repair or replace any product so disassembled.

Excluded from this warranty are light bulbs, fuses and batteries except to the extent that such parts are warranted by the original manufacturer and such warranty is marked on the product. Claim under warranty for light bulbs, fuses or batteries should be made by the purchaser directly to the manufacturer.

Warranty returns must first be authorized by OMNI SPECTRA, INC., or authorized Warranty Service Company.

OMNI SPECTRA, INC., reserves the right to make changes in design on any of its products without incurring any obligation to make the same changes on units previously purchased.

THIS WARRANTY IS THE EXTENT OF THE OBLIGATIONS OR LIABILITIES ASSUMED BY OMNI SPECTRA, INC. WITH RESPECT TO ITS PRODUCTS AND IS IN LIEU OF ALL OTHER WARRANTIES, EXPRESS OR IMPLIED, INCLUDING, BUT NOT LIMITED TO, ANY WARRANTY OF MERCHANTABILITY OR FITNESS. OMNI SPECTRA, INC. SHALL NOT BE LIABLE FOR CONSEQUENTIAL DAMAGES AND ITS LIABILITY IS EXPRESSLY LIMITED TO THE OBLIGATIONS EXPRESSED HEREIN. OMNI SPECTRA, INC. NEITHER ASSUMES NOR AUTHORIZES ANY OTHER PERSON TO ASSUME FOR IT ANY OTHER WARRANTY CONCERNING ITS PRODUCTS.

RETURNING EQUIPMENT UNDER WARRANTY

As per the provisions set forth in our security products warranty, any person desiring to return equipment to Omni Spectra, Inc. for any reason, must first contact Omni Spectra, Inc. for authorization of return.

An authorization number will be issued at the time of authorization, and this number will appear on all correspondence, invoices and credits pertaining to subject equipment.

All Omni Spectra sensors and power supplies are provided with a serial number at the time of manufacture. In order to accurately and efficiently supply replacement parts, perform repair service, or issue credit on equipment being returned to Omni Spectra, Inc. it is essential that Omni Spectra, Inc. be advised of the serial number of the equipment prior to authorization for return. This notification may be made by telephone or by mail.

RETURNING EQUIPMENT FOR NON-WARRANTY REPAIR

Return of equipment out of warranty must first be authorized by Omni Spectra, Inc., at which time a return authorization number will be issued. The returned equipment must be accompanied by an evaluation repair purchase order. Returned equipment will be examined and customer advised of cost of repair or replacement.

REPLACEMENT PARTS

To order a replacement part or module, specify the complete part number and serial number and address the order to:

Omni Spectra Security Products Division
Service Department
2626 South Hardy Drive
Tempe, Arizona 85282

(602) 966-1471
TWX 910–950-1296

APPENDIX D

DIRECTOR 3001 PROGRAMMABLE CONTROLLER MANUAL; STRUTHERS-DUNN, INC.

REPRINTED FROM DIRECTOR 3001 PROGRAMMABLE CONTROLLER MANUAL
BY PERMISSION OF STRUTHERS-DUNN, INC., 1978

PART NO. 79655
Price $10.00

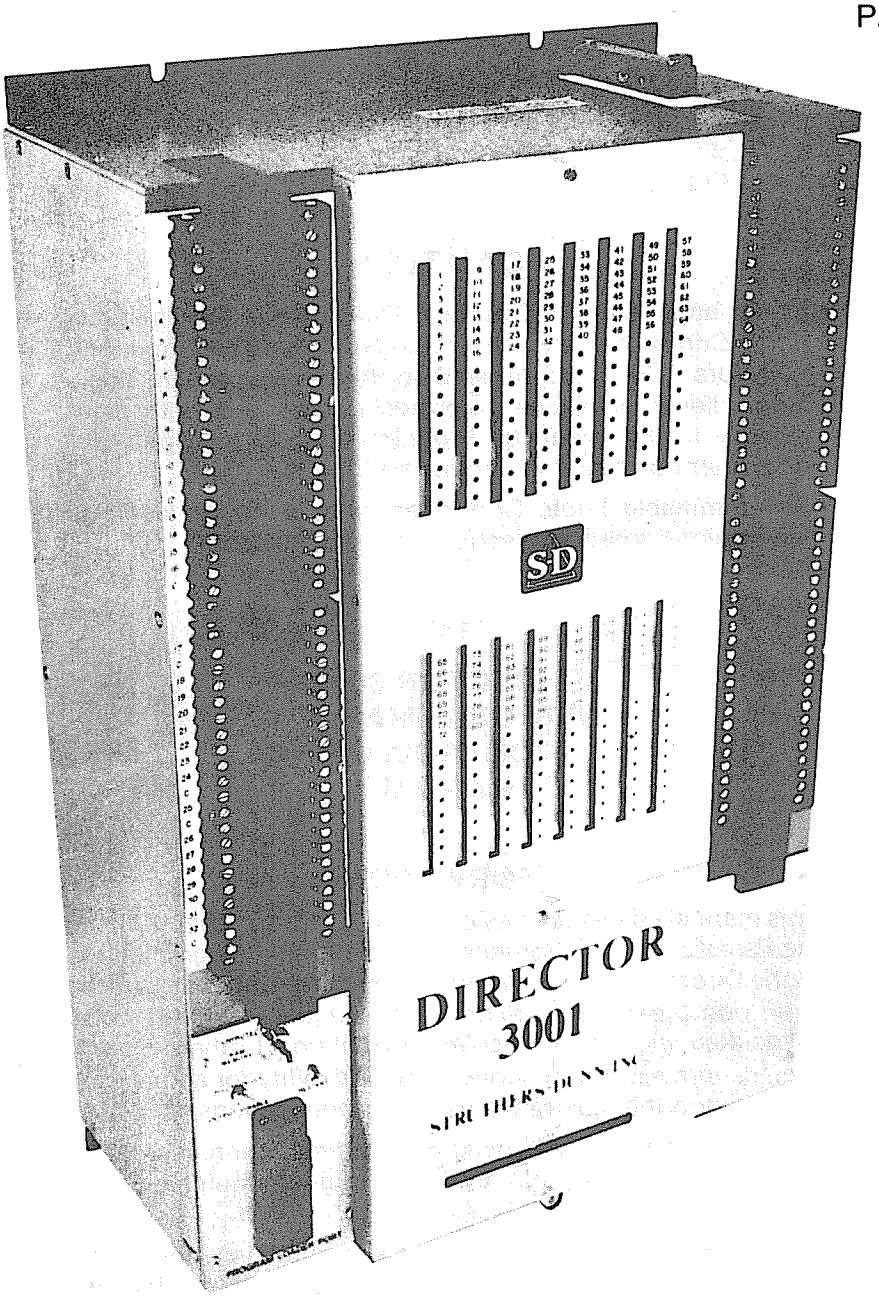

DIRECTOR 3001 PROGRAMMABLE CONTROLLER MANUAL

STRUTHERS-DUNN, INC.
SYSTEMS DIVISION
P.O. BOX 1327, BETTENDORF, IOWA 52722
Manufacturers of Relays and Solid State Controls
Telephone: 319-359-7501

CAUTION

In the application of Struthers-Dunn, Inc. Programmable Logic Controllers, they should be considered a component; therefore, provisions other than the Programmable Logic Controller must be taken to protect personnel directly or indirectly in the event the Programmable Logic Controller equipment or program should malfunction.

Programmable Logic Controllers should not be used as stand-alone safety protection on any application.

DIRECTOR 3001 PROGRAMMABLE CONTROLLER MANUAL

FORWARD

This manual covers the basic specificiation and operation of the Director 3001 Programmable Controller. Programming of the Director 3001 is covered by a separate manual. Due to the complexity, variations and many requirements associated with any particular installation, Struthers-Dunn, Inc., cannot assume responsibility or liability for actual use based upon the illustrative uses and applications.

No patent liability is assumed by Struthers-Dunn, Inc., with respect to use of information, circuits, equipment or software described in this text.

Reproduction of the content of this manual, in whole or in part, without written permission of Struthers-Dunn, Inc., is prohibited.

© 1978 STRUTHERS-DUNN, INC.
Bettendorf, Iowa 52722

FIRST PRINTING October 1978-2000
SECOND PRINTING January 1979-2000
Struthers-Dunn Director 3001 Programmable Controller is protected under one or more of the following U.S. Patent Numbers: 3626248, 3626207, 3626203, 3613029, 3651477, 3663950, 3660692. Other U.S. and Foreign patents are pending.

TABLE OF CONTENTS

PAGE

1.0 INTRODUCTION 1
1.1 GENERAL 1
1.2 CONFIGURATION 1
2.0 DIRECTOR 3001 SPECIFICATIONS 2
2.1 PHYSICAL SPECIFICATIONS 2
2.1.1 Weight 2
2.1.2 Outline Dimensions 2
2.1.3 Temperature Range 2
2.1.4 Relative Humidity Operating Range 2
2.2 ELECTRICAL SPECIFICATIONS 2
2.2.1 Power Requirements 2
2.2.2 Inputs 2
2.2.3 Outputs 2
2.2.4 Timers 3
2.2.5 Counters 3
2.2.6 Controller Cycle Time 3
2.3 HARDWARE SPECIFICATIONS 3
2.3.1 Basic Unit 3
2.3.2 Plug-In I/O Cards 3
2.3.3 Plug-In Data I/O Cards 3
2.3.4 Support Equipment 3
2.3.5 Fuses 4
2.3.6 Suppression Devices 4
3.0 UNPACKING AND INITIAL CHECKOUT 4
3.1 HANDLING CONSIDERATIONS 4
3.2 INTERNAL INSPECTION 4
3.3 MOUNTING INFORMATION 4
3.4 USER MEMORY 4
3.5 SYSTEM COMPONENTS 4
4.0 DIRECTOR 3001 OPERATION 4
4.1 GENERAL 6
4.2 POWER REQUIREMENTS 6
4.3 INPUTS 6
4.3.1 Termination 6
4.3.2 Isolation 7
4.3.3 Electrical Characteristics 7
4.3.4 Input Response Time 7
4.3.5 Input Indication 7
4.4 OUTPUTS 7
4.4.1 Termination 7
4.4.2 Isolation 7
4.4.3 Electrical Characteristics 7
4.4.4 Transient Protection 7
4.4.5 Response Time 8
4.4.6 Output Indication 8
4.4.7 Output Disable Feature 8
4.5 TIMERS AND COUNTERS 8
4.5.1 General 8
4.5.2 Time Ranges 8
4.5.3 Count Ranges 8
4.5.4 Extended Range Timers 9
4.6 RETENTIVE FUNCTIONS 9
4.6.1 General 9
4.7 BATTERY BACK-UP 9
4.7.1 General 9
4.8 FAULT MONITOR 9
4.8.1 General 9
4.9 SYSTEM PROGRAMMING 9
4.9.1 General 9
4.9.2 Data Handling Functions 9

PAGE
4.10 MEMORY 10
4.10.1 General 10
4.10.2 Usage 10
4.10.3 Scan Time 10
5.0 SUPPORT EQUIPMENT 10
5.1 GENERAL 10
5.2 DIRECTOR 1001/3001 PROGRAM LOADER 10
5.3 DATA ENTRY/MONITOR PANEL 10
5.3.1 General 10
5.3.2 Installation 11
5.3.3 Operation 11
5.4 PORTABLE I/O TESTER 12
5.5 ULTRA-VIOLET ERASE LAMP 12
6.0 INSTALLATION 12
6.1 MOUNTING DIMENSION 12
6.2 POWER REQUIREMENTS 12
6.3 INPUT AND OUTPUT CONNECTIONS 12
6.4 ELECTRICAL SUPPRESSION OF LOAD DEVICES 12
6.5 FUSES 13
6.6 I/O CARD POSITING 13
6.7 LEROM INSERTION 13
7.0 SYSTEM START-UP 13
7.1 INTRODUCTION 13
7.2 START-UP PROCEDURE 13
7.2.1 Input Wiring Check 13
7.2.2 Output Wiring Check 13
7.2.3 Program Verification 13
8.0 SERVICING 13
8.1 GENERAL CONSIDERATIONS 13
8.2 INPUT CONSIDERATIONS 14
8.3 OUTPUT CONSIDERATIONS 14
8.4 FAULT MONITOR 14
8.5 CARD REPLACEMENT 15

APPENDIX

FIGURE PAGE
A. DIRECTOR 3001 OUTLINE AND MOUNTING DETAILS 17
B. DIRECTOR 3001 CARD LOCATIONS 18
C. TYPICAL I/O TERMINAL STRIPS 19
D. AC POWER TERMINAL STRIP 19
E. TYPICAL CIRCUIT OF AC/DC INPUT CARD 20
F. TYPICAL CIRCUIT AC OUTPUT CARD 20
G. D.C. OUTPUT CARD CIRCUIT, PNP TRANSISTOR 21
H. D.C. OUTPUT CARD CIRCUIT, NPN TRANSISTOR 21
I. DATA INPUT CARD CONNECTION INFORMATION 22
J. DATA INPUT CARD CONNECTION DIAGRAM 23
K. DATA OUTPUT CARD CONNECTION INFORMATION 24
L. DATA OUTPUT CARD CONNECTION DIAGRAM 25
M. PHOTO OF I/O CARDS 26
N. PHOTO OF DATA I/O CARDS 27
P. PHOTO OF PROM CARD 28
Q. DRIVER/BATTERY CARD, RAM CARD, CPU CARD 29
R. CONTROL SECTION LED INDICATORS 30
S. DATA ENTRY/MONITOR PANEL 31
T. DIRECTOR 3001 SUPPORT EQUIPMENT 32
TABLE
A. DIRECTOR 3001 ADDRESSES 33
B. DIRECTOR 3001 TIMER/COUNTER ADDRESSES 34
C. FUSE RATING CHART 35

1.0 INTRODUCTION

1.1 GENERAL

The Director 3001 is a Programmable Logic Controller (PLC) which provides logic control of small machines or processes. It can duplicate functions of conventional relay panels or solid state logic systems. The unit is designed to operate in an industrial environment where electromagnetic noise, high temperature, humidity and mechanical shock are prevalent. A high degree of ruggedness has been incorporated into its design while maintaining a small, compact structure. The following summarizes the outstanding features of the system which will be discussed in detail in the following portions of this manual:

A. 128 Input/Output connections

B. 104 Internal storage positions ("relays")

C. 3K of programmable memory (LEROM)

D. 32 digital timer or counter positions (programmable)

E. Programmable retentive latches

F. Basic mathematical functions and data handling

G. Internal fault monitoring

H. LED status indicators on inputs and outputs

I. Blown fuse indicators on outputs

J. Built-in Data Entry/Monitor Panel (optional)

1.2 CONFIGURATION

The Director 3001 controller consists of four basic elements as indicated:

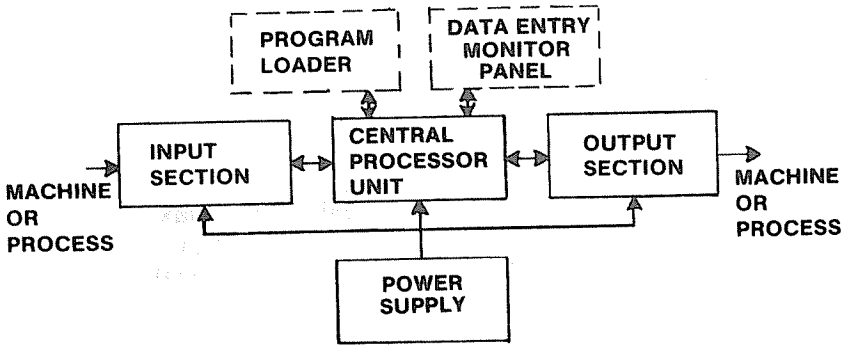

Figure 1

The power supply section converts the incoming 120 or 220V AC 50/60 Hz supply to +5V DC and +12V DC required to power the internal circuitry. A nickel cadmium battery pack, with trickle charge circuitry, is also supplied to provide the retentive characteristics for the timer/counter and programmable latch functions. Blown-fuse and power-on indicators are also provided.

The processor section is the heart of the Director 3001 System. It consists of a CPU and memory unit. The Central Processor Unit (CPU) accepts signals from the external input devices and controls the outputs of the system as directed by the instructions placed in memory. It contains the internal storage registers and programmable timer/counter elements. The CPU receives and transmits information from the Program Loader (P/N 75482) and Data Entry/Monitor Panel (P/N 75467).

The memory complement consists of 3K of light erasable read only memory (LEROM) and 1K of random access memoy (RAM). The LEROM memory contains the control sequence programmed by the system user and is expandable in 1K increments up to the maximum of 3K.

The RAM is used to store timer/counter preset values and latch functions. It is protected by the battery back-up system previously described to provide those retentive functions when required.

The input/output circuitry provides the critical interfacing features required to allow the controller to communicate with the machine or process hardware. The input section contains the isolation, threshold and signal conditioning circuitry necessary to provide noise-free operation in an industrial environment. Commands from the CPU are transmitted to the output switches through transformer couplers. The AC outputs are protected from external surges by metal oxide varistors (MOV). Indicating fuses are supplied to protect the output switches and output load devices.

2.0 DIRECTOR 3001 SPECIFICATIONS

2.1 PHYSICAL SPECIFICATIONS

2.1.1 WEIGHT

Director 3001 ..... 70 lbs. (32Kg)

2.1.2 OUTLINE DIMENSIONS

Director 3001

Height ..... 28¼" (71.8cm)
Width ..... 17½" (44.5cm)
Depth ..... 9½" (24.1cm)

(Refer to Fig. A in Appendix for complete outline and mounting instructions)

2.1.3 TEMPERATURE RANGE

Operating Temperature Range ..... 0° to 65°C
Storage Temperature Range ..... -40° to 95°C

2.1.4 RELATIVE HUMIDITY OPERATING RANGE

Relative Humidity Range ..... 10% to 95% Continuous, Non-Condensing

2.2 ELECTRICAL SPECIFICATIONS

2.2.1 POWER REQUIREMENTS

Line Voltage ..... 120/220 Selectable on Terminal Strip
Line Frequency ..... 50/60 Hz
Voltage Range ..... ±15% of Nominal Voltage
Drop out time ..... 3 cycles min.
Power ..... 130 Watts max.

2.2.2 INPUTS

Inputs per card ..... 8 (one totally isolated)
Input response time ..... 16 MSEC Nom.
Isolation ..... Photo Coupling (1500 Volts peak)
Input current (by user) ..... 10 MA Nom.
Input voltage (nominal) ..... 5 Volts DC
12 Volts AC/DC
24 Volts AC/DC
48 Volts AC/DC
100 Volts AC/DC
120 Volts AC/DC
220 Volts AC/DC
Operating Range ..... ±15% of Nominal Input Voltage
Hysteresis ..... 10% of Nominal Input Voltage
Threshold ..... 2/3 of Nominal Input Voltage
Status Indication ..... Green LED

2.2.3 OUTPUTS

Outputs per card ..... 8 (one totally isolated)
Nominal working voltage ..... 0-220 Volts AC
0-120 Volts AC
0- 48 Volts DC
Current rating ..... 1 AMP or 3 AMPS cont. max.
Inrush ..... 50 AMPS max. for 20 MSEC
Isolation ..... Transformer (1000 Volts peak)
Minimum load current ..... None required
Transient Protection ..... Metal Oxide Varistor (MOV) internally supplied
Fuse rating ..... Internally provided fuse clip (see Appendix Table C)
Status Indicator ..... Red LED

2.2.4 TIMERS

Timers per controller	32 Max.
Time range	000.1 to 999.9 Sec.
Resolution	±.1 Sec.
Repeat accuracy	±.1%
Adjustments	Programmable presets (4 digit)

2.2.5 COUNTERS

Counters per controller	32 Max.
Count range	0000 to 9999
Count speed	600 per minute maximum
Adjustment	Programmable presets (4 digit)

2.2.6 CONTROLLER CYCLE TIME

Cycle time	6 to 50 MSEC depending on user program

DIRECTOR 3001 CONTROLLER PARTS BREAKDOWN

2.3 HARDWARE SPECIFICATIONS

2.3.1 BASIC UNIT

Part No.	Description
75457	Basic unit
75A12	Central Processor
11718	1K LEROM chip
75A08	Line Driver/Battery card (with 3 batteries)
75A10	PROM card (without customer PROM)
75A11	1K RAM card (with 1K RAM)

2.3.2 PLUG-IN I/O CARDS

Part No.	Description
75A04	5 VDC Input
75A05	12 VAC/DC Input
75A06	24 VAC/DC Input
75A26	48 VAC/DC Input
75A31	100 VAC/DC Input
75A07	120 VAC/DC Input
75A29	220 VAC/DC Input
75A32	0-48 VDC Output (Pos. Common), 3 amps
75A01	0-120 VAC Output, 3 amps
75A03	0-48 VDC Output (Neg. Common). 3 amps
75A30	0-220 VAC Output, 3 AMPS
75A02	0-125 VDC Output, 0.25 AMPS
75A36	0-48 VDC (Neg. Common), 1 AMP
75A35	0-120 VAC, 1 AMP
75A37	0-240 VAC 1 AMP

2.3.3 PLUG-IN DATA I/O CARDS

Part No.	Description
75A38	5 VDC, 2-4 Digit Data Input Board, 10 MSEC response time
75A39	5 to 24 VDC, 1-4 Digit Data Output Board

2.3.4 SUPPORT EQUIPMENT

Part No.	Description
75482	Program Loader - 60Hz
75441	Portable I/O Tester
75467	Data Entry/Monitor Panel
35502	Ultra-Violet Erase Lamp (120V, 60Hz)
43072	Program Loader Cable-8 ft.

2.3.5 FUSES

Part No.	Description
27605	5AGC 5 amp
27624	GBA 3 AMP Indicating
27625	GBA 1.5 AMP Indicating

2.3.6 SUPPRESSION DEVICES

Part No.	Description
15803	10 Joule MOV
10804	1N4003 Diode

3.0 UNPACKING AND INITIAL CHECKOUT

3.1 HANDLING CONSIDERATIONS

The Director 3001 uses the latest "state of the art" Cos/Mos digital integrated circuits, therefore certain handling considerations should be used over and above standard digital integrated circuits.

Because Cos/Mos devices have high input resistance, they are susceptible to damage when exposed to static electrical charges. To avoid possible damage to the devices during handling or testing, the following precautions should be followed:

1. The leads of devices should be in contact with a conductive material, except when being tested or in actual operation to avoid build up of static charge.
2. Soldering-Iron tips, metal parts of fixtures and tools and handling facilities should be grounded.
3. Devices should not be inserted into or removed from circuits with the power on because transient voltages may cause permanent damage.
4. Circuit boards which are removed from the Director 3001 should be placed in a conductive plastic bag or wrapped in aluminum foil to avoid static discharges from damaging the boards.

When handling the printed circuit boards, direct contact should not be made with the electrical runners or integrated circuit leads.

> The input and output terminals of the Director 3001 are not in direct contact with any Cos/Mos devices, therefore no special handling or wiring considerations are necessary.

3.2 INTERNAL INSPECTION

After unpacking the Director 3001 Controller from the shipping carton, it is good practice to remove the front cover and to give a general mechanical inspection to ensure that everything is in good condition.

3.3 MOUNTING INFORMATION

The mounting information for the Director 3001 is located in an envelope attached to the outside of the controller. Refer to Figure A in the Appendix for mounting information.

3.4 USER MEMORY

The Lerom Memory Chip(s) used for entering the customer's program must be inserted into the PROM card. Refer to Figure P in the Appendix for proper location of the User Memory Chips.

3.5 SYSTEM COMPONENTS

The Director 3001 controller can be assembled for various I/O requirements. All input and output cards are shipped in their own containers and must be unpackaged and inserted into the Director 3001 according to the users assignments. The control cards are installed in the Director 3001 when shipped and should not need further attention.

4.0 DIRECTOR 3001 OPERATION

4.1 GENERAL

A programmable controller monitors the status of inputs (pushbuttons, limit switches, etc.) and provides outputs in the form of solid state "contact closures" to drive solenoids, motor starters and other load devices. Each contact and coil must be individually wired in a relay control system. The relay system must be rewired if changes in the control sequence are necessary.

The Director 3001 greatly reduces the wiring of contacts and coils. Each external input and output device is simply wired into a terminal strip on the controller. The controller is then programmed to perform the required logic functions. The Director 3001 is easily reprogrammed if changes are required.

The program is stored in a memory which is constantly scanned. The instructions in the memory, acting on changing input conditions, update the status of the outputs in the prescribed sequence. The Director 3001 can duplicate timing, sequencing, counting, and latching functions as well as general purpose relay operations.

The Director 3001 controller generally duplicates all control functions of a ladder diagram network. Prior to application, a system evaluation should be performed to determine if the requirements fall within the range of the controller. This is simply accomplished by summing the number of inputs, outputs, timers, counters, latch relays and general purpose relays needed. The Director 3001 can accommodate 128 input/output Circuits. It also contains 104 internal "relays" in addition to 32 positions which can be programmed as either timers or counters. Any output or internal storage position "relay" can be programmed to be retentive as a latch function.

Input and output cards are easily added to the system by virtue of a simple plug-in design. Each card contains 8 circuits. Card location in the controller is not restricted so that input or output cards can occupy any of the 16 positions available. LED status indicators are provided on all cards. Green LED's are supplied with input cards. Output cards are supplied with red LED's. Indicating (pop-out) type fuses are supplied on all output positions to aid in system maintenance.

The 32 programmable timers or counters have 4 digit capability. The timers are of the on-delay type but can be programmed to simulate off-delay operation. The counters may be arranged to count up, down or up/down.

In addition to the 104 internal storage locations provided (simulated relay coils), any unused output addresses can be used for additional storage or any I/O address where a card is not inserted. The coils of unused timer/counters can also be treated as internal "relays" if required.

INPUTS

The input contacts (limit switches, push buttons, etc.) complete the circuit to supply a voltage to the Director 3001 input terminals. Inputs may be wired singly or in groups to reduce the number of inputs required. The LED status indicators on the input card will be on when the voltage is supplied to the input terminals. (Note: Director 3001 requires a voltage input, not just a contact closure.)

The connection diagram (refer to Figure C in appendix) shows the method by which the inputs are connected to the controller. **It is good practice to avoid routing input/output field wiring in the same wire bundle with voltages of 440 V or greater.**

OUTPUTS

The Director 3001 provides solid state contact closures to operate output devices (solenoids, lights, motor starters, etc.).

The LED status indicator on the output card will be on when the output is commanded to turn on; this LED remains on or off regardless of the position of the output disable switch.

The output switch does not supply the voltage to operate these load devices.

The connection diagram (refer to Figure C in Appendix) shows the method by which the output devices are connected to the controller.

No precautions are needed in connecting outputs to the controller other than the specific cases described in Section 4.4.4 (Transient Protection). Proper polarity must be observed for DC outputs.

MEMORY

The Director 3001 uses a non-volatile, light erasable, read only memory (LEROM) device. Each chip is capable of 1024 words. The memory board has provisions for accepting 3 of these chips for a maximum capacity of 3072 (3K) words. The chips are reusable since an existing program can be readily erased by exposure to intense ultra-violet light. The recommended erase time when using the bulk erase lamp (P/N 35502) is **45 minutes.**

CONTROLLER SCANNING SEQUENCE

The Director 3001 scanning sequence is based on an internal Clock.

All inputs to the controller are gated into a storage register at the beginning of each and every scan of the program memory.

After the inputs are gated into the controller, the programmed memory is scanned from beginning to end in sequence of the user program.

During the scan of memory certain outputs and internal storage locations are instructed to turn on or off, depending on the condition of their associated logic. At the time the decision is made to change the condition of the outputs, this decision is updated in output Register A (refer to Figure 2).

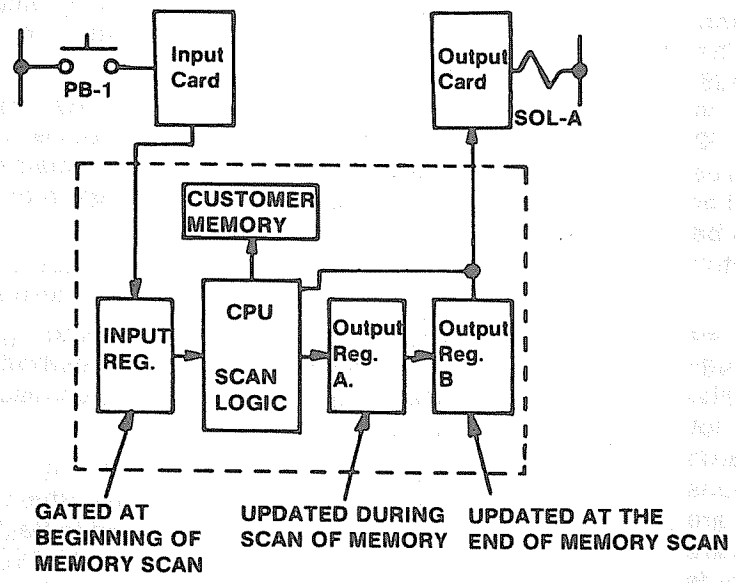

FIG. 2

After all of the memory has been scanned, then all of the results in Register A are transferred to Register B. Register B is directly connected to the output driver cards.

During the scan of the memory, outputs are updated in Register A, but their results cannot be used until the following scan of memory because the central processing unit looks at the output of Register B (refer to Fig. 2). The following example will show how the outputs are updated.

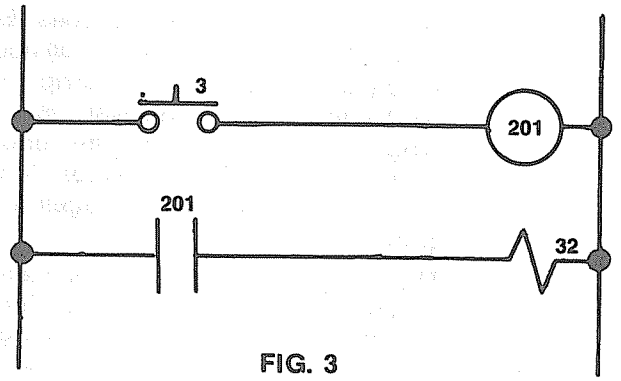

FIG. 3

During the scan that input 3 is energized, storage location 201 (Register A) will be energized, but contact 201 will not activate during this scan. The next scan of the memory, contact 201 will activate and cause output 32 to energize at the end of memory scan. The same procedure will be true on de-energization of outputs.

The memory will only be scanned through the area that has program inserted. Therefore the scan rate of the controller depends on the length of the user program.

4.2 POWER REQUIREMENTS

The Director 3001 is designed to operate on 120/220 volts AC ± 15%. Operating frequency is 50 or 60 Hz. Maximum power consumption is 130 watts. The system does not supply power to energize machine mounted input or output devices. The power (AC and/or DC) must be supplied by the user.

Power is supplied to the controller through a three (3) wire terminal facility (see Figure D in Appendix). The primary power fuse is located on the right hand side of the enclosure top plate. The chassis ground connection must be firmly secured to provide operator safety.

The power supply is normally wired for 120 volts AC as shipped from the factory. If 220 volts operation is desired a jumper must be removed on the AC terminal strip. Refer to Figure D in the Appendix for details.

4.3 INPUTS

4.3.1 TERMINATION

Inputs to the Director 3001 are normally from limit switches, selector switches, push buttons, etc. They are connected to the controller via field wiring which is

terminated on a terminal strip mounted on the Director 3001. The terminal strip is rated at 600 volts and is capable of accepting two (2) 14 AWG wires. A number 6-32 screw and a captive wire clamp plate holds the wires securely in place.

Each input card is configured to provide one isolated circuit (2 wire connection) and seven circuits sharing the same common (refer to Figure E in the Appendix).

4.3.2 ISOLATION

Each input to the controller is isolated from the decision making logic of the controller by a photo coupled isolation device.

4.3.3 ELECTRICAL CHARACTERISTICS

The standard input voltage is 120 volts AC, however, other voltages both AC and DC are available.

The input voltage at which the input changes from a logic O (off) to a logic 1 (on) is 70 to 90 volts for a standard input. In addition, each input requires 10MA of current (by user) to operate the input circuit. Therefore, the minimum input signal voltage should be 90 volts and the external circuit impedance should allow a minimum of 10MA of current to flow. These requirements provide a high degree of noise immunity to the input circuit.

4.3.4 INPUT RESPONSE TIME

The input circuit to the Director 3001 is provided with a filter (time delay) of approximately 16 MSEC. The primary reason for the time delay is to filter out noise and contact bounce.

4.3.5 INPUT INDICATION

Each input to the Director 3001 uses a green LED (light emitting diode) for status indication. The LED will be energized when its corresponding input terminal has rated voltage applied.

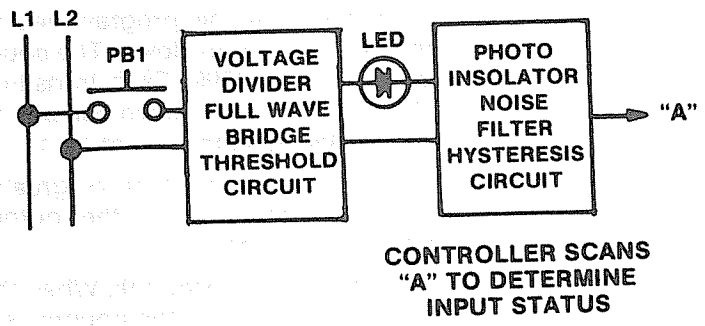

CONTROLLER SCANS "A" TO DETERMINE INPUT STATUS

FIGURE 4

4.4 OUTPUTS

4.4.1 TERMINATION

Outputs from the Director 3001 are normally connected to solenoid valves, motor starters, indicators, etc. through external wiring. This wiring is connected to the controller through the use of 600 volt terminal strips provided on the Director 3001. Each terminal is capable of accepting two (2) 14 AWG wires. A 6-32 screw and captive wire clamp plate hold the wires securely in place.

One isolated output circuit and seven circuits sharing a single common connection are provided on each output card (ref. Figures E, F, G & H in the Appendix)

4.4.2 ISOLATION

Each output is transformer isolated from the decision making logic.

4.4.3 ELECTRICAL CHARACTERISTICS

The standard output ratings are 0-120V AC with a 0-3 AMP continuous load at 55° C. The maximum inrush current is 50 AMPS for 20 MSEC. DC outputs are also available.

Each output is fused with an indicating fuse which is mounted in fuse clips on the output board. This fuse is intended to protect both the ouput switch and the external load.

4.4.4 TRANSIENT PROTECTION

Each AC output is protected from voltage transients by the use of a 2 joule MOV (Metal Oxide Varistor).

Additional protecion may be required when:

1. The controller output is bypassed with a mechanical switch (pushbutton) for manual control.
2. The controller output has a mechanical switch in series with the load.
3. The controller output is switching any DC inductive load.

When the above type of operation is desired, it is advisable to suppress the AC load device with a metal oxide varistor (MOV), S-D part number 15803 (GE part number V130LA10). In case of DC loads use a suppression diode, S-D part number 10804 (type 1N4003 or equivalent). Refer to Figure 5.

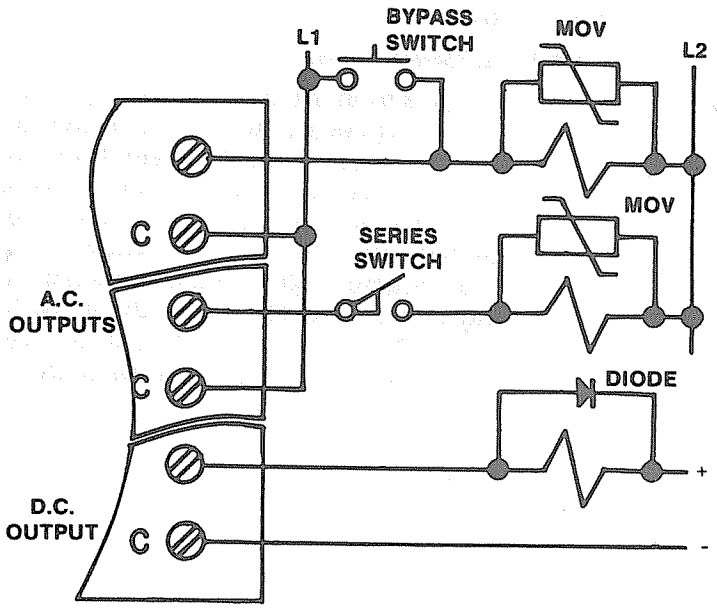

FIGURE 5

4.4.5 RESPONSE TIME

The output switches respond at the end of each memory scan, to a turn on command from the controller (within a few micro-seconds). However, due to the inherent nature of the AC output switch (triac), the outputs turn off very near the point of zero current in the load following a program command to turn off.

4.4.6 OUTPUT INDICATION

The outputs of the Director 3001 use red LEDs to indicate the status of the outputs. The LED will be on when the outputs are being commanded to energize. If the output disable switch is on or if an internal fault is detected, the outputs will be inhibited from energizing any loads, but the LED's will still be active.

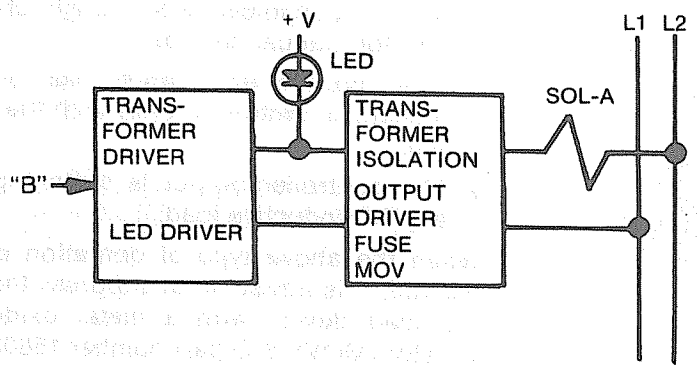

FIGURE 6

4.4.7 OUTPUT DISABLE FEATURE

The Director 3001 provides a switch (see Figure R in the Appendix) that can be used to disable all the outputs in the controller. When this switch is in the "on" (down) position, all outputs will be de-energized but operation of the output LED status indicators will remain unaffected. In addition, the output disable indicator will be energized. This feature is extremely useful during equipment start-up and debugging operations. This circuit also automatically activates if an internal fault is detected.

4.5 TIMERS AND COUNTERS

4.5.1 GENERAL

The Director 3001 has 32 registers (see Table B in the Appendix) available for programming timer or counter networks. The timers can be individually programmed for on- or off- delay operation. The counters can be designed for count up, down, or up/down operation. Due to controller design, the elapsed time or count of these devices may be retained on power loss. Refer to the programming manual for detailed information.

4.5.2 TIME RANGES

The basic timer is normally an on-delay time function. The time range is 000.1 to 999.9 seconds and will time in 0.1 second increments.

The time interval will begin when the start coil is energized and will reset when the start coil is de-energized.

The timers are preset to a programmed time, and decrement from the preset values. When the time equals 000.0 the timed output contact will transfer and remain so until the start coil is released.

4.5.3 COUNT RANGES

The counters can be programmed to count up, down, or up/down. The count range is 0000 to 9999. Each transition (off to on) of the up or down coil will increase or decrease the count by 1.

When the count is equal to or greater than the present count, the output contact will be closed.

The counter has a reset coil. When the reset coil is energized, the counter will reset to 0000.

The counter accumulates positive numbers only and will not decrement below 0000. The maximum count rate is 600 counts per minute if counting pulses from a standard input circuit.

4.5.4 EXTENDED RANGE TIMERS

Timers can be developed with timing ranges exceeding the 999.9 second limitation described in section 4.5.2. Time bases of 1, 10 and 60 seconds are accessible in the controller which, when programmed into a counter, can provide timing ranges of 9999, 99990 seconds or 9999 minutes respectively. Refer to the Program Loader Instruction Manual for additional information.

4.6 RETENTIVE FUNCTIONS

4.6.1 GENERAL

The Director 3001 has the capability of providing retentive memory (power loss retention) on all internal storage locations and outputs. The user has the option of programming any or all of these functions to be retentive. Refer to the programming manual for proper application.

4.6.2 RAM KEYSWITCH

A three-position, key operated switch is mounted on the lower left corner of the Director 3001 (see Figure R in the Appendix). The three positions are as follows:

UNPROTECT — In this position timer and counter presets may be entered or modified through the Data Entry/Monitor Panel or the Program Loader.

PROTECT — This position provides security against unauthorized or unintentional changes in any timer or counter preset.

CLEAR — This spring-loaded position allows resetting or clearing of all retentive latches (which are stored in RAM memory). To clear the latches, hold the key switch in the CLEAR position while depressing the RESTART switch or while powering up the controller.

4.7 BATTERY BACK-UP

4.7.1 GENERAL

Three nickel-cadmium batteries are supplied on the line/driver battery board with the Director 3001. They are used to power the circuitry which provides the retentive features previously described (ref. sections 4.5 & 4.6). The batteries are constantly charged by trickle charge circuitry while the controller is energized. Battery life is guaranteed for 90 days with no power applied to the controller. If retentive characteristics are not required, the batteries may be removed without adversely affecting controller operation.

4.8 FAULT MONITOR

4.8.1 GENERAL

Fault monitoring circuitry has been provided in the Director 3001. During controller operation the customer and executive programs are examined for proper coding and sequence, in addition to proper operation of the system clock signals. If any abnormalities in these areas are detected, the control system will automatically go into an "output disable" condition. The "CPU Fault" and "Output Disable" indicators will energize (see Figure R). The controller can only be put back in normal operation by removing the source of the fault and resetting the system by momentarily actuating the "restart" switch (see Figure R) or by removing and reapplying power to the controller.

4.9 SYSTEM PROGRAMMING

4.9.1 GENERAL

The director 3001 is programmed in ladder diagram format by using the Director 1001/3001 program loader (P/N 75482). The Director 3001 controller is capable of:

128 input/output connections (I/O)

32 timers or counters

104 relay coils (internal storage)

3K words of memory maximum (expandable in 1K increments)

In addition, the unit contains special features such as power-on reset and 1, 10, and 60 second time bases. They are available to provide additional programming flexibility and efficiency. "Jump" and "Reset" functions are also available for multiple program capability, generation of special software programs and duplicating such functions as shift registers and step switches.

4.9.2 DATA HANDLING FUNCTIONS

The data handling software extends the basic capability of the Director 3001 controller. It allows the user to perform addition, subtraction and comparison of 4-digit numbers as well as transferring data between registers.

During the programming process pages may be specified as relay pages or data pages. These pages may be intermixed in any order of sequence and may be searched and status-monitored the same as relay pages. In addition to the status monitoring, data pages also display the current 4-digit contents of the data register addresses.

By use of data input (P/N 75A38) and data output cards (P/N 75A39) in any of the 1 through 64 address card slots, 4-digit numbers can be moved into and out of the controller. A data input card will accept (2) 4-digit BCD inputs through its 32 signal wires (5VDC signal level — TTL compatible). A data output card has provision for 16 signal wires (5 - 24 VDC, 50 MA maximum — open collector outputs) to output one 4-digit number. Inputs and outputs may be multiplexed through data registers under data page program control.

4.10 MEMORY

4.10.1 GENERAL

The Director 3001 may be operated with 1024 (1K) words of light erasable read only memory (LEROM). The Director 3001 has provisions for memory expansion up to 3072 (3K) words in 1K increments. The memory is non-volatile and can be erased for reuse by exposure to ultra-violet light.

4.10.2 USAGE

The amount of memory required for any application will generally vary in direct proportion to the complexity of the control scheme and the number of input and output devices connected to the controller. A memory requirement can be estimated by summing the input and output functions and multiplying by a factor of 20.

A more exact method of memory determination may be needed in applications where large amounts of shift register and step switch routines are used. Any time during programming the number of unused memory words may be displayed by depressing the MEM LEFT key on the program loader.

4.10.3 SCAN TIME

The memory scan time of the Director 3001 will vary within the range of 6 to 50 milliseconds. The logic structure and status of Jump or Reset functions (if used), will have effect on this parameter.

NOTE: The scan time of the controller is not a fixed value for a given program and; therefore, should not be used to augment the 32 internal digital timers.

5.0 SUPPORT EQUIPMENT

5.1 GENERAL

A complete line of support equipment is available to provide a simple and rapid approach to program design and development, system start-up and maintenance.

5.2 DIRECTOR 1001/3001 PROGRAM LOADER (P/N 75482)

The program loader has been designed to permit direct entry of control sequences in ladder diagram format. Its CRT display provides the designer with a visual verification of the program being entered into its 3072 words of read/write memory. An audible error warning system has been incorporated into the unit to signal simple format mistakes. Presets for the 32 programmable timers and counters are easily entered with the keyboard provided.

Upon entering the program into memory, the designer can connect the program loader to the controller and verify sequence validity. The sequence can easily be modified or refined by simple editing operations on the R/W memory. If on-line program checks are not required, the program in R/W memory can be transferred directly into the LEROM chips (1K at a time).

The program loader also functions as a diagnostic tool allowing the user "real time" monitoring of controller operation. The controller can be operated from its own LEROM or the R/W memory in the program loader. A search function is available to allow the user to rapidly locate circuit elements requiring examination. The force mode is provided to manipulate circuit elements for program simulation or aid in sequence de-bugging. Details on these functions and other features can be found in the Director 1001/3001 Program Loader Manual.

5.3 DATA ENTRY/MONITOR

5.3.1 GENERAL

The Data Entry/Monitor Panel (P/N 75467) provides an alternate means of monitoring or changing timer/counter presets. It can also be used to perform on-line status monitoring of all Director

3001 inputs, outputs and internal storage (see Figure S). If both the Data Entry/Monitor Panel and the Program Loader are connected to the Director 3001, no keys should be operated on the Data Entry Panel because it might result in a "fault" condition and cause the controller to shut down (disable).

5.3.2 INSTALLATION

The Data Entry/Monitor Panel mounts directly on the front of the Director 3001. De-energize the controller and remove the four (4) screws holding the cover plate on the controller to gain access to the interface connnector.

Carefully insert the Data Entry/Monitor Panel into the interface connector. Fasten the four (4) mounting screws.

Caution: Insure that the interfacing connector is fully engaged prior to tightening mounting hardware. The unit should only be inserted or removed with power removed from the controller.

5.3.3 OPERATION

Four individual modes of operation can be selected on the Data Entry/Monitor Panel. They are:

A. Timer/Counter Status Mode (function number 2)

B. Timer/Counter Preset Mode (function number 3)

C. I/O Status Mode (function number 1).

D. Data Register Status/Set Mode (function number 4)

Timer/Counter Status Mode

The operator can observe the current value of any one of the 32 timer/counter locations while the controller is operating. This mode is accessed by:

1. Depressing the clear key [C] to clear upper and lower displays.
2. Select T/C status mode function by depressing key [2].
3. Depressing enter key [E]
4. Enter number (1 through 32) of timer/counter position desired into "ADDR" display area.
5. Depressing enter key [E]
6. Current value of address will appear in "DATA" display area.

Timer/Counter Preset Mode

Timer/Counter presets can be changed quickly through use of the Data Entry/Monitor Panel. The timers can be preset from 000.1 to 999.9 seconds in 0.1 second increments.

Counter settings can be made within the range of 1 to 9999.

NOTE: The RAM keyswitch must be in the UNPROTECT position.

To enter a preset value:

1. Depress the clear key [C], to clear upper and lower displays.
2. Select T/C preset mode by depressing key [3].
3. Depress enter key [E].
4. Enter number (1 through 32) of timer/counter position desired.
5. Depress enter key [E].
6. Enter timer/counter preset data.
7. Depress enter key [E].

I/O Status Mode

The status (on-off) of any input, output, internal storage or timer/counter address can be determined with the Data Entry/Monitor Panel as follows:

1. Depress clear key [C] to clear upper and lower displays.
2. Depress key [1] to access I/O status mode.
3. Depress enter key [E].
4. Enter address of circuit element to be examined.
5. Depress enter key [E].
6. The "ON" or "OFF" LED's will signal status of the address interrogated.

Data Register Status/Set Mode

The operator can observe the current value and enter or set the contents of any of the 64 4-digit, internal data registers. Also the preset or current values of any of the 32 timers/counters may be observed at addresses D201 through D232 and D301 through D332 respectively. However, this is actually a duplication of the information displayed in the Timer/Counter Status and Preset Modes described earlier. (See Table B - Appendix)

To access the current value of any data address:

1. Depress clear key [C] to clear upper and lower displays.
2. Depress key [4] to access a data address.
3. Depress enter key [E].
4. Enter the data address.
5. Depress enter key [E].

The current value is displayed in the DATA area. The display of addresses D201 through D232 are not up-dated so the above procedure must be repeated each time a register is examined.

NOTE: The RAM key switch must be in the UNPROTECT position.

To enter or change data in a data register:

6. First perform the previous five steps.
7. Enter the number to be set into the data register.
8. Depress enter key [E].

At this point successive entries may be made into the same data register by repeating steps 7 and 8 only.

5.4 PORTABLE I/O TESTER (P/N 75441)

The Director 1001/3001 I/O Card Tester (See Figure T in the Appendix) is a portable unit which is designed to test on a pass-fail basis. Any standard I/O card (excluding Data I/O cards) used in the Director 1001 or Director 3001 may be tested one address at a time for proper operation at its nominal rated voltage. Inputs are checked for turn-on and outputs are checked for complete turn-on and for turn-off during disable. Both inputs and outputs are checked for shorts between circuits.

5.5 ULTRA-VIOLET ERASE LAMP (P/N 35502)

The ultra-violet erase lamp (see Figure T in the Appendix) is available to facilitate erasure of programmed LEROM chips. This bulk eraser can accommodate 6 chips. Exposure time of 45 minutes is recommended to eradicate programmed LEROM's.

NOTE: Over exposure to ultra-violet radiation may cause permanent damage or shorten the useful life of LEROM units.

6.0 INSTALLATION

6.1 MOUNTING DIMENSION

The Director 3001 is 28¼" high, 17½" wide and 9½" deep. It will mount directly onto a cabinet subpanel or with side rails into a 19" rack. A 10" or 12" deep NEMA 12 enclosure should be used. No special ventilation or cooling is required under normal circumstances.

CAUTION: If heat generating components (such as voltage regulators, power supplies, etc.) are placed in the same enclosure with the controller, ventilation or cooling may be required to limit ambient temperature to 65°C.

6.2 POWER REQUIREMENTS

The Director 3001 Controller will operate on 120/220 volts, AC, ±15% 50 or 60 Hz. The controller will consume 130 watts of power maximum. The system does not supply power to energize inputs or drive loads. This power (AC or DC) must be supplied by the user (see Figure C). A 3-wire terminal facility is provided to supply power to the controller. The primary fuse is located on the right hand side of the enclosure top plate (Figure D). The chassis ground connection must be firmly secured for safety purposes.

The power supply is normally wired for 120 volt operation at the factory. If 220 volt operation is desired, a jumper must be removed from the AC terminal strip shown in Figure D.

6.3 INPUT AND OUTPUT CONNNECTIONS

Terminal strips are provided on the left and right hand sides of the controller to accommodate field wiring. External wiring is easily brought into the terminal strips through covered wire-way ducts provided. The terminal strips are rated for 600 volts and are capable of accepting two (2) 14 AWG wire. A number 6-32 screw and captive wire clamp plate hold the wires in place.

Each input and output card contains one (1) isolated circuit and seven (7) circuits sharing the same common (refer to section 4.3.2).

It is good practice to avoid routing input/output field wiring in the same wire bundle with voltages exceeding 440 volts.

6.4 ELECTRICAL SUPPRESSION OF LOAD DEVICES

Generally, no precautions are needed in connecting outputs to the controller. Additional transient protection may be required when:

1. The controller output is bypassed with a mechanical switch (pushbutton) for manual control.
2. The controller output has a mechanical switch in series with the load.
3. The controller output is switching any DC inductive load. Refer to section 4.4.4 for recommended procedures for handling these conditions.

6.5 FUSES

Fuse holders are provided in all output cards. An indicating fuse is required to complete the load circuit (see Fuse Rating Chart, Appendix — Table C).

The intended purpose is to protect the solid-state output switch and external load. The primary power fuse (5 AGC - 5 AMP) is located on the right hand side of the enclosure top plate.

6.6 I/O CARD POSITIONING

All I/O positions can be used for either input or output cards. Data I/O boards may be used in address positions 1 through 64 only.

6.7 LEROM INSERTION

The user LEROM chip(s) must be inserted into the sockets with notched end or pin 1 pointing as indicated on the PROM card. If incorrectly mounted, damage to the chip or PROM card may result (see Figure P in the Appendix).

If timer/counter presets are to be entered into LEROM, the LEROM chip in the last (CUS2) position must be inserted. The ladder diagram portion of the third LEROM chip cannot be used unless both the first and second LEROM chips are used also because the microprocessor fills the memory sequentially starting from the first chip.

7.0 SYSTEM START-UP

7.1 INTRODUCTION

The start-up of a system incorporating a new program requires checkout procedures not necessary in the routine maintenance of an established, proven system. Since the new system may contain both wiring and programming errors, the following procedure is recommended.

Once power has been connected to the controller and all input-output wiring has been completed, an additional amount of time spent double-checking can be an over-all time saver. Even though a program may look perfect on paper, chances are that the first attempt to bring a machine into full operation may be met with various human and mechanical errors. These errors should be eliminated before the program is placed into the system, to reduce the number of variables. Examples are faulty or incorrect wiring to limit switches, solenoids, or improper setting on rotary cams.

7.2 START-UP PROCEDURE

Prior to applying power to the system, insure that input devices are wired to input terminals and output devices are wired to output terminals on the controller.

7.2.1 INPUT WIRING CHECK

Proper wiring to input devices can be easily checked as follows:

1. Place "output disable" switch in "disabled" (down) position.
2. Apply power to input devices
3. Manually activate input devices and observe assigned input position LED status indicator on controller. If properly wired, the proper LED will respond on device activation.

7.2.2 OUTPUT WIRING CHECK

Output device wiring can quickly be checked by using the program loader in the following manner:

1. Connect program loader to controller.
2. Apply power to controller and output devices.
3. Place "Output Disable" switch in the "enabled" (up) position.
4. Using the "force" mode of the program loader (see instruction manual), actuate momentarily each controller output to see if proper load device responds.

7.2.3 PROGRAM VERIFICATION

With the program loader connected to the controller, a rapid verification of program operation can be made using the "force" mode.

1. Place "Output Disable" switch in "disabled" (down) position.
2. Force individual inputs in the same sequence as predicted by machine or process operation. Observe appropriate output LED status indicators or CRT output display to verify proper program operation.

8.0 SERVICING

8.1 GENERAL CONSIDERATIONS

The following steps should be followed if the programmable controller appears to fail after successfully operating for a period of time:

1. Check input and output devices external to the controller for proper operation.

2. Check LED status indicators for proper response to the program. Also check LED's in the control section (see Figure R in the Appendix).
3. Check timer and counter settings.
4. Use the program loader (P/N 75482) or data entry/monitor panel (P/N 75467) to test for propert internal logic operation.

8.2 INPUT CONSIDERATIONS

Initially check the external input devices (i.e. pushbuttons, limit switches, etc.) and wiring for proper operation. If functional, place "Output Disable" switch in "disabled" (down) position and proceed as follows:

1. Manually activate input devices and observe the corresponding input position LED status indicators for proper response. If no response is detected, remove power from the controller and replace the input card.
2. If proper responses are detected in Step 1, remove power from controller and connect the program loader or data entry/monitor panel to the controller. Energize the controller and observe internal input logic response while inputs are being activated. If no response is detected for a particular input, remove power and replace the input card.

NOTE: If diagnostic equipment is not available, an interchange of input card positions in the controller may locate a defective card. The program will shift to another part of the control sequence if a defective card is present.

8.3 OUTPUT CONSIDERATIONS

Test external load devices and wiring for proper operation. This can be quickly done by placing the "Output Disable" switch in the "disabled" (down) position, and connecting a jumper across the pair of output terminals feeding the load device. If the load devices appear to operate properly, proceed as follows:

1. If an output LED status light is on but the corresponding load device is de-energized, inspect fuses located on output card. The LED indicates status of the output driver circuit and will operate even if the output switch or fuse is defective. Replace the output card if the fuses are not defective.
2. The "force" feature of the program loader may be used to individually energize each output circuit to test operation (see Program Loader Manual). If a particular output cannot be forced, a defective output card may be suspected.
3. The data entry/monitor panel can also be used to test continuity of the logic circuitry up to the output card. After testing the fuses, place the "Output Disable" switch in the "disabled" (down) position and manually activate the input devices required to activate the output device. If continuity can be established, replace output card. If continuity cannot be established the CPU board may be defective.

8.4 FAULT MONITOR

The Director 3001 possesses fault monitoring circuitry which will be automatically activated if certain internal faults are detected. The faults are primarily associated with the central process board (CPU) and are as follows:

1. Failure of the internal clock operation
2. Executive program sequence errors
3. User program decoding errors
4. User program sequence errors

When the fault monitor detects a malfunction, the output disable circuit is activated. The "CPU Fault" and "Output Disable" LED indicators (see Figure R) will energize. Power to the controller will remain on to facilitate trouble shooting procedures. Generally, activation of the fault monitor will indicate a defective CPU board.

The following will also trigger the fault monitor but do not reflect a defective component.

1. Absence of the LEROM chip
2. Absence of a user program on the LEROM
3. Incorrect orientation of the LEROM in socket.
4. User program which specifies a Jump or Reset beyond the end of the user's program.

8.5 CARD REPLACEMENT

All cards located in the Director 3001 controller can be easily removed and replaced. Zero insertion force connector assemblies are used to retain all cards in the controller mainframe. To remove any card, de-energize the controller and simply turn the locking levers so they are perpendicular to the card. Gently pull the card from the controller. A card can be rapidly inserted by reversing the above procedure.

NOTE: Please observe handling procedures outlined in section 3.1 to prevent possible damage to cards when performing replacement operations.

APPENDIX

APPENDIX E

BRADLEY TOWER SELF-STUDY UNIT: USE OF VICON CONTROL PANELS

BRADLEY TOWER

SELF STUDY UNIT

USE OF VICON CONTROL PANELS

This six-section programmed text is designed to teach you the function of each of the switches on the Mimic and Matrix type VICON Control Panels.

The information presented in the accompanying NAFEC booklet "Operational Instructions and Description for the VICON Control Panels", and the exercises beginning on page 2 will enable you to "self-teach" the control panel and its functions.

Upon completion of this program, you will be able to match a list of the VICON switches with their associated functions without error and, after a one-hour practice period, properly operate the Mimic and/or Matrix type VICON Control Panels.

It is suggested that the Glossary on pages 14 and 15 of the reference NAFEC booklet be used in conjunction with the exercises beginning on page 2.

Supervisory personnel are advised to take particular note of the Maintenance Notification requirements on pages 12 and 13 of the reference NAFEC booklet.

BDL TWR TRNG
8/27/79

VICON

SECTION A

Refer to the NAFEC booklet "Operational Instructions and Description for the VICON Control Panels".

Turn to page 1 and read the information pertaining to the description of the VICON Control Display Panels, Switches and Controls, and turning the VICON system on or off. After studying the information in Parts I and II, answer the questions below. The correct answers appear at the end of Section A.

Select the true statements in the following questions. Circle the letters of your choice.

1. The Local Controller:

   a. Activates only those VICON light cluster switches controlling departure points on the active runway or runways.

   b. Activates an "ON/OFF" switch at the VICON control panel.

   c. Deactivates an "ON/OFF" switch at the VICON control panel.

   d. As required, deactivates all runway activation switches for runways not used for departure.

2. When activating the VICON System, depressing the Runway Activation Switch will:

   a. Cause a green bar to light on the Runway Activation Switch.

   b. Cause all VICON light cluster switches on the control panel to light with amber lights.

   c. Allow only the runway-end departure point VICON light cluster switch to become operational.

   d. Cause all VICON light cluster switches for departure points on the selected runway to light with amber lights.

3. When activating the VICON System, depressing the Runway Activation Switch for the appropriate departure runway:

   a. Activates all VICON light cluster switches for the entire panel.

   b. Automatically excludes selection of the VICON System for another runway.

c. Activates all VICON light cluster switches for departure points that can be utilized in that direction of operation.

d. Restricts the operation to only those VICON light cluster switches which are lighted "amber identification".

4. When deactivating the VICON System, depressing the Runway Activation Switch:

a. Will cause the green bar light on the Runway Activation Switch to go out.

b. Deactivates all VICON light cluster switches on that runway.

c. Deactivates the runway-end VICON light cluster switch only.

d. Automatically activates the VICON light cluster switches for the reciprocal runway.

SECTION A

ANSWERS

1. The Local Controller:

   a. Activates only VICON lights at the departure points.

   d. As required, deactivates all runway activation switches for runways not used for departure.

2. When activating the VICON System, depressing the Runway Activation Switch will:

   a. Cause a green bar to light on the Runway Activation Switch.

   d. Cause all VICON light cluster switches for departure points on the selected runway to light with amber lights.

3. When activating the VICON System, depressing the Runway Activation Switch for the appropriate departure runway:

   c. Activates all VICON light cluster switches for departure points that can be utilized in that direction of operation.

   d. Restricts the operation to only those VICON light cluster switches which are lighted "amber identification".

4. When deactivating the VICON System, depressing the Runway Activation Switch:

   a. Will cause the green bar light on the Runway Activation Switch to go out.

   b. Deactivates all VICON light cluster switches on that runway.

VICON

SECTION B

Refer to the NAFEC booklet. Turn to page 1, Part III, and read the information pertaining to Operation of the VICON System. After studying Part III, answer the questions below. The correct answers appear at the end of Section B.

Select the true statements in the following questions. Circle the letters of your choice.

5. Electronic devices utilized to deactivate the VICON light clusters are:

   a. The Microwave System at the ends of runway 1, 6, 15, 19, 24 and 33.

   b. The Microwave System at the ends of runways 6, 15, 24, 33.

   c. The Microwave System at the ends of runways 6, 15, 24, 33, and runway intersection departure points.

   d. Timers at all departure points on the airport other than at the ends of runways 6, 15, 24 and 33.

Write the correct information in the blanks of the following:

6. Once the VICON System on a departure runway has been activated, the _____ half of the VICON light cluster switches are lighted with an _____ colored light.

7. Once depressed, the _____ half of the VICON light cluster switch will go out and be replaced by a _____ colored light in the _____ half of the switch face.

Select the true statements in the following questions.

8. Depress the VICON light cluster switch corresponding to the departure point being used:

   a. Concurrently with the clearance for takeoff.

   b. Five seconds before transmission of takeoff clearance.

c. Immediately before the radio transmitted clearance for takeoff.

d. Ten seconds before the radio transmitted clearance for takeoff.

9. Failure to obtain a green light after depressing a VICON light cluster switch may indicate:

a. That the switch bulb is burned out.

b. A faulty microwave sensor or timer.

c. A malfunction somewhere in the system to that particular VICON position.

d. Sufficient "amber light" time has not transpired to allow activation of the VICON green light.

SECTION B

ANSWERS

5. Electronic devices utilized to deactivate the VICON light clusters are:

   b. The Microwave System at the ends of runways 6, 15, 24, 33.

   d. Timers at all departure points on the airport other than at the ends of runway 6, 15, 24 and 33.

6. Once the VICON System on a departure runway has been activated, the upper half of the VICON light cluster switches are lighted with an amber colored light.

7. Once depressed, the upper half of the VICON light cluster switch will go out and be replaced by a green colored light in the lower half of the switch face.

8. Depress the VICON light cluster switch corresponding to the departure point being used:

   a. Concurrently with the clearance for takeoff.

9. Failure to obtain a green light after depressing a VICON light cluster switch may indicate:

   a. That the switch bulb is burned out.

   c. A malfunction somewhere in the system to that particular VICON position.

VICON

SECTION C

Refer to the NAFEC VICON booklet. Turn to page 4 and read the information pertaining to Cancellation of Takeoff Clearance.

After studying the information in Part IV, answer the questions below. The correct answers appear at the end of Section C.

10. Write the two actions required to cancel a takeoff clearance when using the VICON System.

11. Write the procedures required when using the VICON System to clear an aircraft to taxi into position and hold on a runway immediately behind a preceding departure.

VICON

SECTION C

ANSWERS

Your answers should be similar to the following:

10. Two actions are required:

    a. Cancel the takeoff clearance by voice radio instruction in accord with prescribed procedures.

    b. Cancel the VICON light cluster by use of the "override" switch.

11. Clear the aircraft to "TAXI INTO POSITION AND HOLD", then push the override button to cancel the VICON lights.

VICON

SECTION D

Refer to the NAFEC VICON booklet. Turn to pages 4, 5, 6 and 7 and read the information pertaining to Testing the Control Panel and VICON Switches.

After studying the information in Part V, answer the questions below. The correct answers appear at the end of Section D.

Write the correct information in the blank spaces of the following sentences.

12. A complete test of the VICON control panel and VICON System should be accomplished at least once each _____ hours.

13. The Watch Check of the Control Panel and VICON System can be limited to that portion of the panel and System _____ _____.

14. Write the actions that should be taken if a VICON switch lamp does not light.

Select the true statements in the following. Circle the letters of your choice.

15. The light weight remote control Primary/Secondary unit may be used to control the VICON lights at:

    a. A runway end and first intersection.

    b. One preselected runway end.

    c. Two preselected runway ends.

    d. A runway end and a programmed intersection.

16. Write the three steps of the Remote Control Unit Test.

_____

_____

_____

VICON

SECTION D

Write the correct information in the blank spaces of the following sentences.

17. Deactivation of VICON System lights following a remote control unit test is accomplished by _____.

18. The Remote Control Unit should be checked at least _____.

Select the true statements in the following questions. Circle the letters of your choice.

19. VICON Light Cluster Test:

    a. Should be accomplished at least once each week.

    b. Should be confirmed visually by automobile.

    c. At least once each 24 hours.

    d. For the active runway or runways is desirable at the beginning of each watch.

20. VICON Light Cluster Tests are conducted by activating:

    a. Runways 1, 6 and 15.

    b. Each VICON Light Cluster in sequence.

    c. Override switch to cancel each VICON light.

    d. The lamp test button to visually check the VICON panel.

    e. Runways 19, 24 and 33.

    f. All of the above.

    g. The panel light intensity control.

VICON

SECTION D

ANSWERS

12. A complete test of the VICON control panel and VICON System should be accomplished at least once each 24 hours.

13. The Watch Check of the Control Panel and VICON System can be limited to that portion of the panel and system for the configuration in use (active runways only).

14. Write the actions that should be taken if a VICON switch lamp does not light. Your answer should be similar to this:

    Maintenance (Comm. Unit) should be notified. If Comm. Unit personnel are not on duty, reporting of this malfunction can be delayed until they are.

15. Use of the light weight remote control unit is limited to control of VICON lights at:

    b. One preselected runway end.

    c. Two preselected runway ends.

16. Write the three steps of the Remote Control Unit Test. Your answer should be similar to this:

    a. Select the Primary and Secondary departure points using the Remote Selectors.

    b. Depress the Primary switch on the remote unit and observe the operation of the corresponding switch on the control panel.

    c. Depress the Secondary switch on the remote control unit, and observe the operation of the corresponding switch on the control panel.

17. Deactivation of VICON System lights following a remote control unit test is accomplished by use of the override switch.

18. The Remote Control Unit should be checked at least once each watch.

VICON

SECTION D

ANSWERS

19. VICON Light Cluster Test:

    c. At least once each 24 hours.

    d. For the active runway or runways is desirable at the beginning of each watch.

20. VICON Light Cluster Tests are conducted by activating:

    a. Runways 1, 6 and 15.

    b. Each VICON Light Cluster in sequence.

    c. Override switch to cancel each VICON light.

    e. Runways 19, 24 and 33.

VICON

SECTION E

Refer to NAFEC VICON booklet. Turn to pages 6 and 7 and read the information pertaining to VICON Light Cluster Intensity, and Control Panel Light Intensity.

After studying the information in Parts VI and VII, answer the questions below. The correct answers appear at the end of Section E.

Select the true statements in the following questions. Circle the letters of your choice.

21. The Panel Dimmer switch:

    a. Allows for adjustment to meet need for higher control panel lighting intensity.

    b. Controls the intensity of the lamps in the control panel switches.

    c. Allows for adjustment to meet anticipated need to raise the intensity of the lamps in the control panel switches at night.

    d. Controls the intensity of the VICON lamp clusters.

22. The VICON light cluster intensity control should be placed on the "AUTO" setting except when the visibility is:

    a. 1/2 mile or less.

    b. 1/8 mile or less.

    c. 1/4 mile or less.

    d. Less than 1/4 mile.

23. Other than when the visibility is 1/4 mile or less, in the event a malfunctioning photoelectric cell causes unsatisfactory VICON Light Cluster intensity, place the Light Cluster Intensity control switch:

    a. On the "HI" setting during night time hours.

    b. On the "LO" setting during day time hours.

    c. On the "HI" setting during day time hours.

    d. On the "LO" setting during night time hours.

SECTION E

ANSWERS

21. The Panel Dimmer switch:

    a. Allows for adjustment to meet need for higher control panel lighting intensity.

    b. Controls the intensity of the lamps in the control panel switches.

22. The VICON light cluster intensity control should be placed on the "AUTO" setting except when the visibility is:

    c. 1/4 mile or less.

23. Other than when the visibility is 1/4 mile or less, in the event a malfunctioning photoelectric cell causes unsatisfactory VICON Light Cluster intensity, place the Light Cluster intensity control switch:

    c. On the "HI" setting during day time hours.

    d. On the "LO" setting during night time hours.

VICON

SECTION F

Refer to NAFEC VICON booklet. Turn to pages 7, 8, 9, 10 and 11. Read the information pertaining to Malfunctions.

After studying the information in Part VIII and Table 1, answer the questions below. The correct answers appear at the end of Section F.

24. Place the appropriate letter representing the actions listed below, in Column B opposite the malfunction listed in Column A.

    a. Suspend operation.

    b. Continue operation.

    c. Suspend operation at that departure point.

    d. Suspend operation of VICON System.

A - MALFUNCTION	B - ACTION
(1) Panel back lighting lamps.	(1) _____
(2) Failure of Runway Activation Switch (Active Runway).	(2) _____
(3) Failure of Runway Activation Switch (Other than Active Runway)	(3) _____
(4) VICON Light Cluster Switches.	(4) _____
(5) VICON Light Cluster Switch Bulbs.	(5) _____
(6) Override Switch.	(6) _____
(7) Override Switch Bulb.	(7) _____
(8) VICON Light Cluster	(8) _____
(9) VICON Light Intensity Control	(9) _____
(10) Microwave Aircraft Detector (Active Runway).	(10) _____
(11) Microwave Aircraft Detector (Other than Active Runway).	(11) _____

SECTION F

ANSWERS

24.	MALFUNCTION	ACTION
(1)	Panel back lighting lamps.	b. Continue operation.
(2)	Failure of Runway Activation Switch (Active Runway)	a. Suspend operation.
(3)	Failure of Runway Activation Switch (Other than Active Runway)	b. Continue operation.
(4)	VICON Light Cluster Switches	b. Continue operation.
(5)	VICON Light Cluster Switch Bulbs.	b. Continue operation.
(6)	Override Switch	d. Suspend operation of VICON system.
(7)	Override Switch Bulb	b. Continue operation.
(8)	VICON Light Cluster	b. Continue operation.
(9)	VICON Light Intensity Control	b. Continue operation.
(10)	Microwave Aircraft Detector (Active Runway)	c. Suspend operation at that departure point.
(11)	Microwave Aircraft Detector (Other than Active Runway)	b. Continue operation.

VICON

CRITERION TEST

The correct answers appear at the end of the test.

1. Label the circles and squares representing the control switches and selectors in the attached unlabeled diagram of the Mimic Type Control Panel, with the letter which represents them, listed below. (Page 19)

   A. Runway Activation Switch

   B. Lamp Test

   C. Primary Select Control

   D. Secondary Select Control

   E. VICON List Cluster Activation Switch

   F. Override Switch

   G. Light Cluster Intensity Control

   H. Panel Light Intensity Control

2. Match each control function in Column A with the correct control switch or selector from Column B.

Column A	Column B
____ a. Runway activation	1. Runway Activation Switch
____ b. Runway deactivation	2. Lamp Test
____ c. Illuminate VICON Lights	3. Primary Select Control
____ d. Manual cancellation of VICON lights	4. Secondary Select Control
____ e. Control panel lamp test	5. VICON Light Cluster Activation Switch
____ f. Select Primary Remote Control departure point	6. Override Switch
____ g. Control VICON light cluster intensity	7. Light Cluster Intensity Control
____ h. Select Secondary Remote Control departure point	8. Panel Light Intensity Control
____ i. Adjust control panel light intensity	

VICON

CRITERION TEST

QUESTION 1

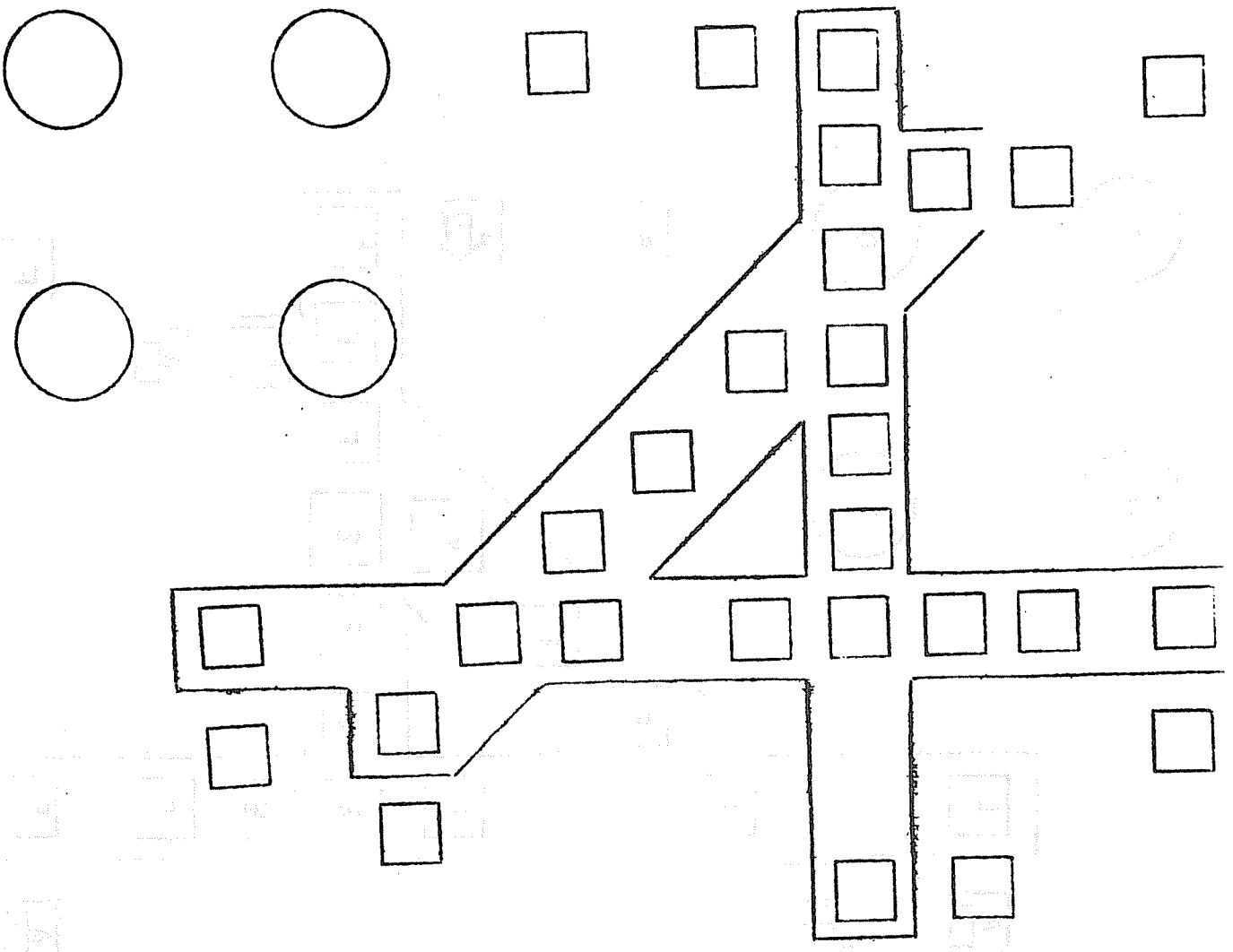

VICON

ANSWERS TO CRITERION TEST

QUESTION 1

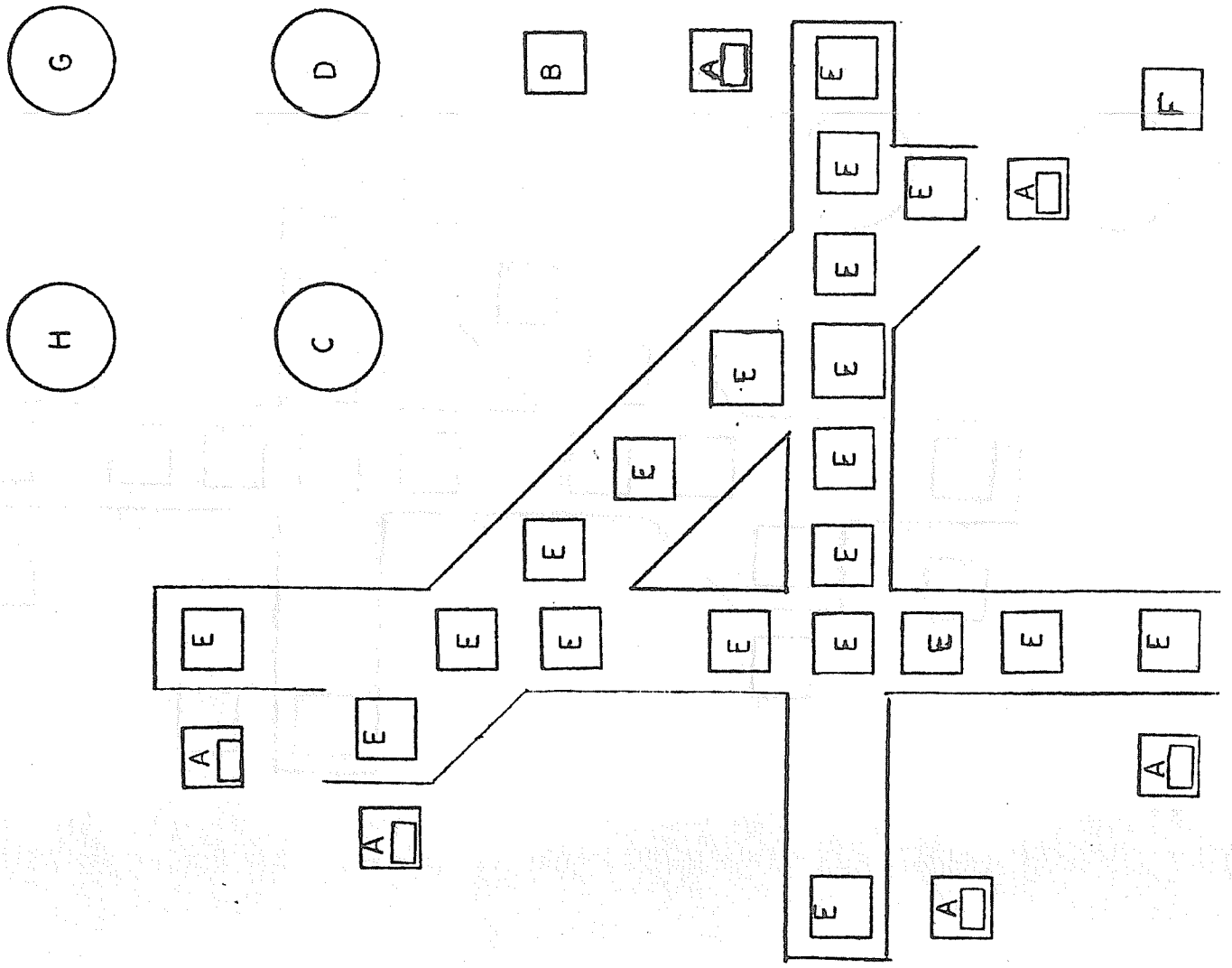

VICON

ANSWERS TO CRITERION TEST

QUESTION 2

2. Match each control function with the correct control switch.

a.	Runway activation	1.	Runway Activation Switch
b.	Runway deactivation	1.	Runway Activation Switch
c.	Illuminate VICON lights	5.	VICON Light Cluster Activation Switch
d.	Manual cancellation of VICON lights	6.	Override Switch
e.	Control panel lamp test	2.	Lamp Test
f.	Select Primary Remote Control departure point	3.	Primary Select Control
g.	Control VICON light cluster intensity	7.	Light Cluster Intensity Control
h.	Select Secondary Remote Control departure point	4.	Secondary Select Control
i.	Adjust control panel light intensity	8.	Panel Light Intensity Control

APPENDIX F

OPERATIONAL DESCRIPTION AND INSTRUCTIONS FOR THE VICON TOUCH-SENSITIVE CONTROL PANEL

TABLE OF CONTENTS

	Page
DESCRIPTION OF VICON TOUCH-SENSITIVE PANEL	1
TURNING THE VICON SYSTEM ON OR OFF	2
Runway Activation	2
Runway Deactivation	3
OPERATION OF THE VICON SYSTEM	3
CANCELLATION OF TAKEOFF CLEARANCE	4
TESTING OF CONTROL PANEL AND TOUCH SWITCHES	4
Lamp Test (Control Panel Lamps)	5
MALFUNCTIONS	5
MAINTENANCE NOTIFICATION	5
REMOTE CONTROL UNIT	6
LEGEND FOR FIGURES 1,3, & 4	7
FIGURE 1	8
FIGURE 2	9
FIGURE 3	10
FIGURE 4	11
FIGURE 5	12

OPERATIONAL DESCRIPTION AND INSTRUCTIONS

FOR THE

V I C O N

TOUCH-SENSITIVE CONTROL PANEL

by PAUL ZITO, ANA-210

Felix F. Hierbaum, Program Manager, ANA-210

John J. Maurer, Project Manager, ANA-210

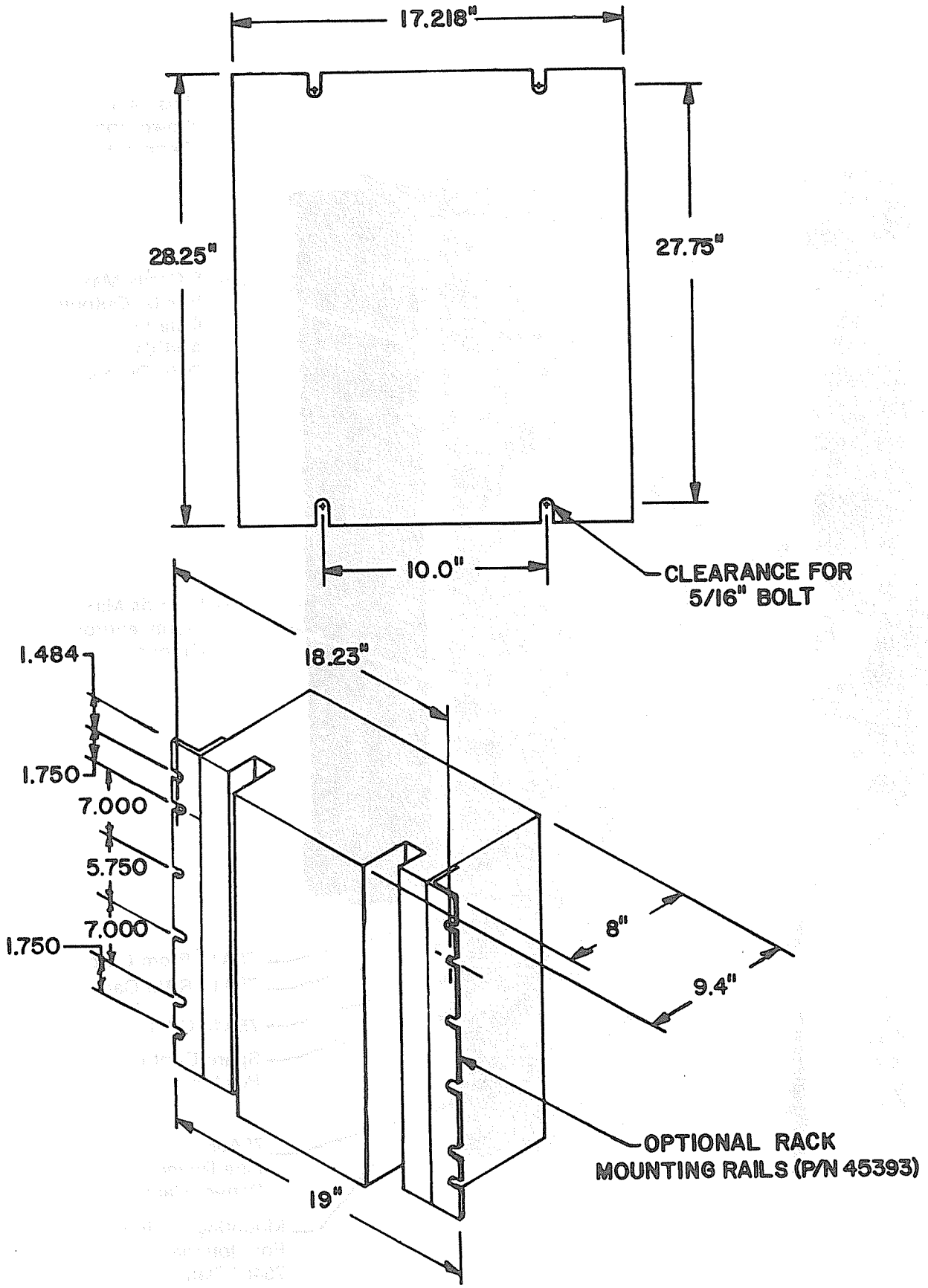

DIRECTOR 3001 OUTLINE AND MOUNTING DIMENSIONS
FIGURE A

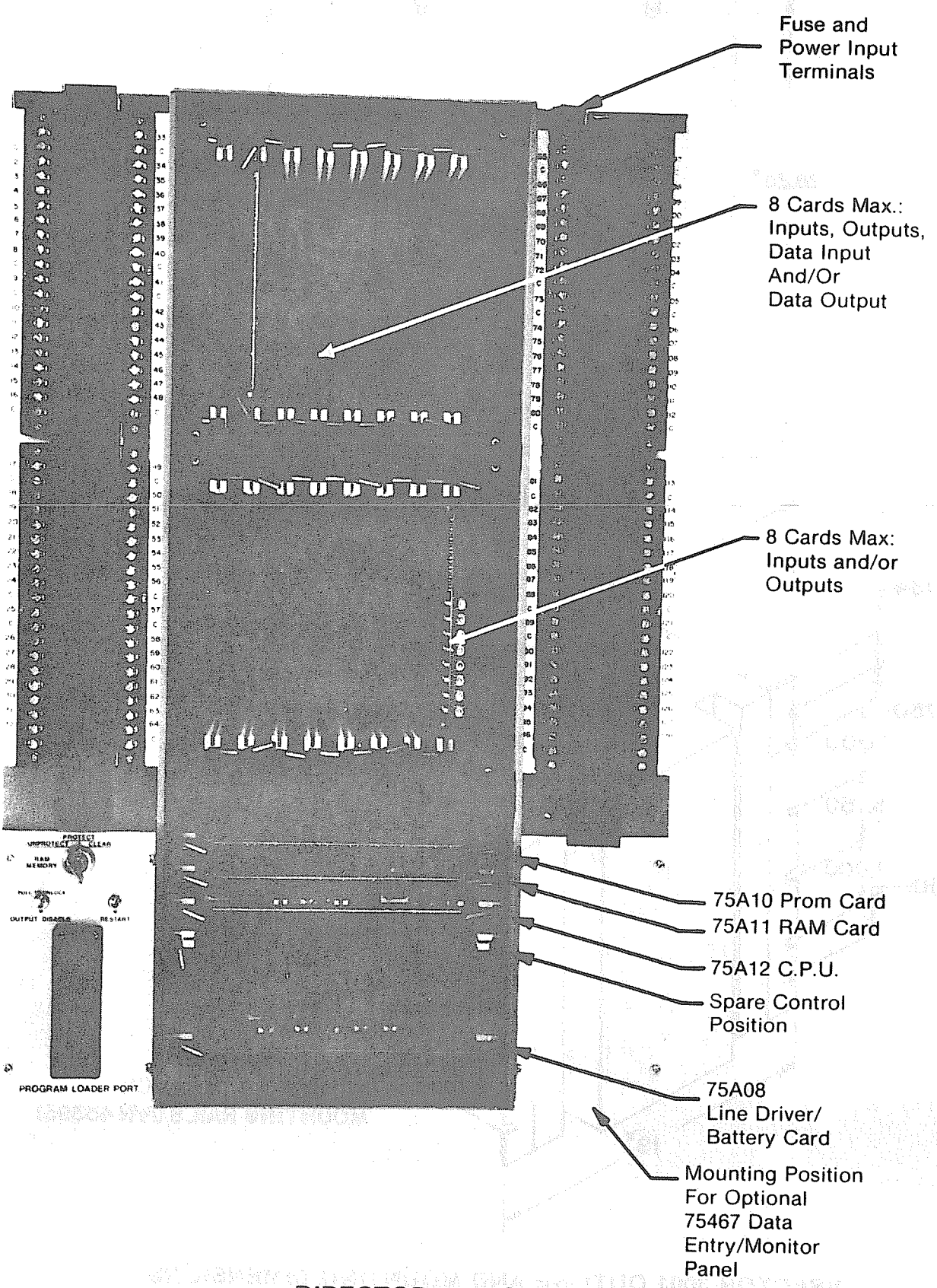

DIRECTOR 3001 CARD LOCATIONS
FIGURE B

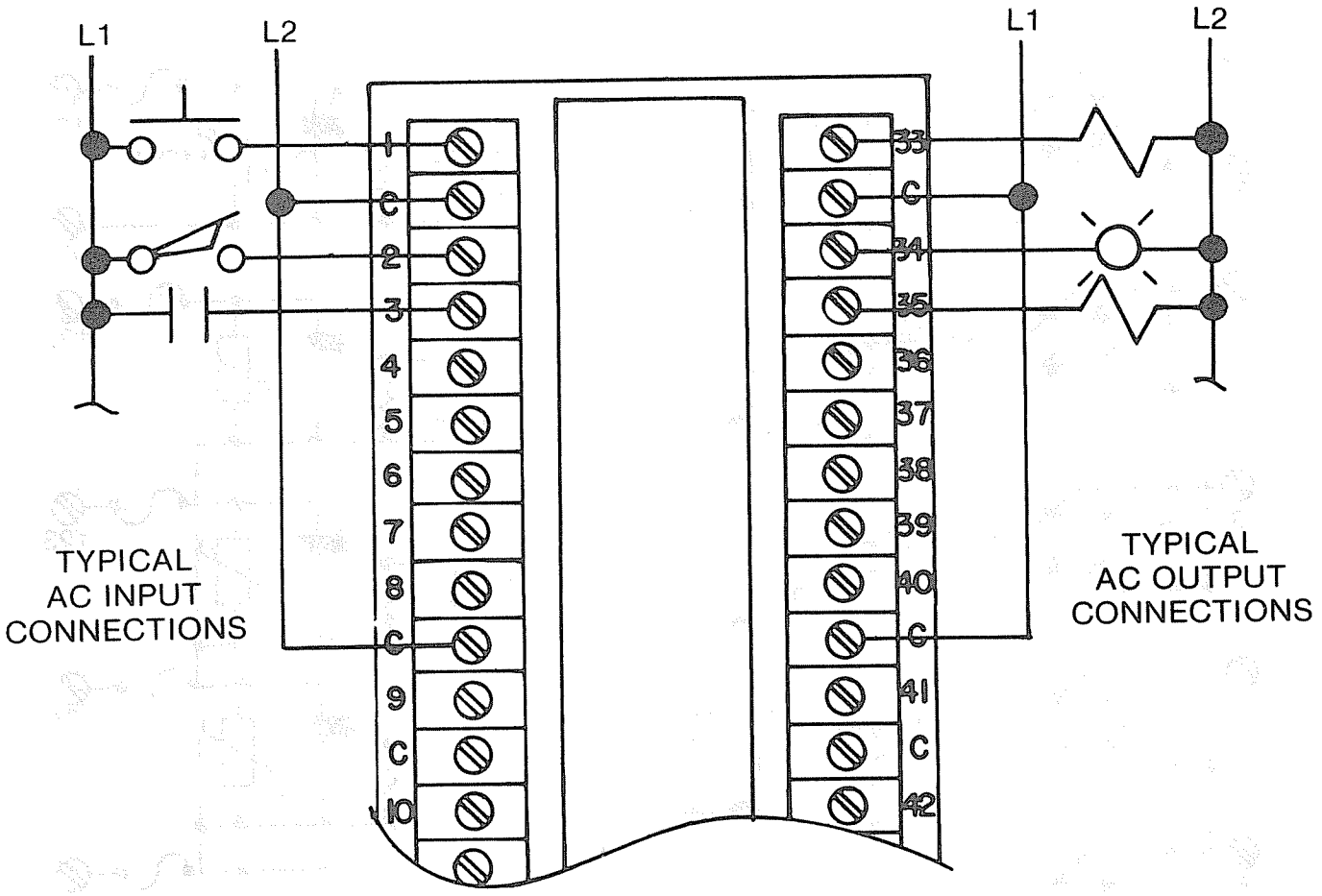

TYPICAL I/O TERMINAL STRIPS
FIGURE C

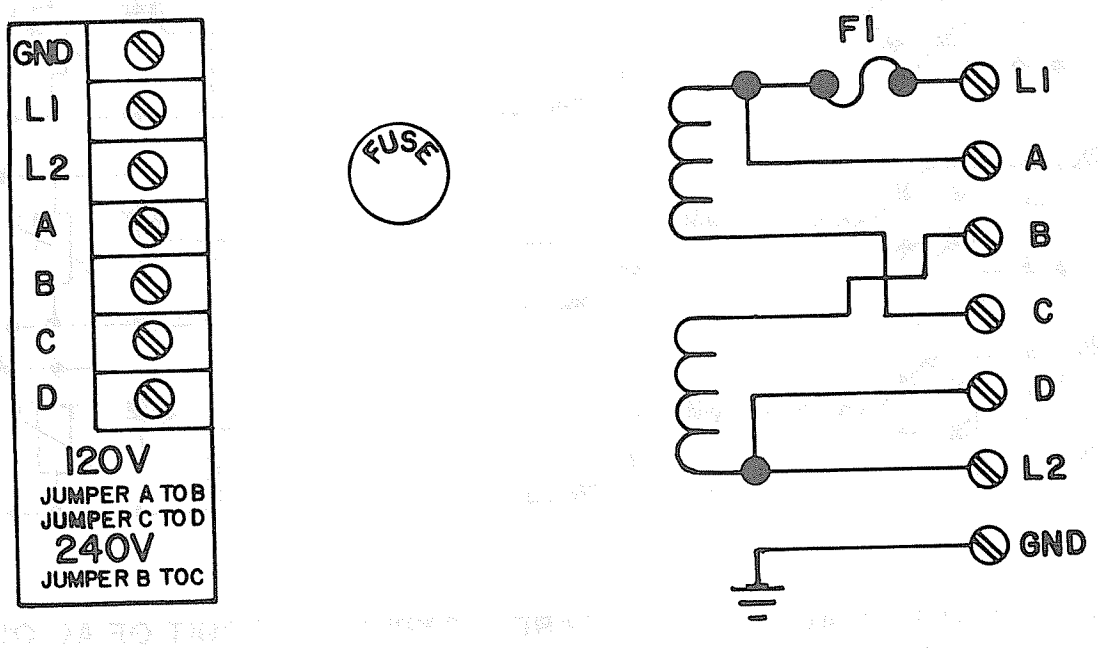

AC POWER TERMINAL STRIP
FIGURE D

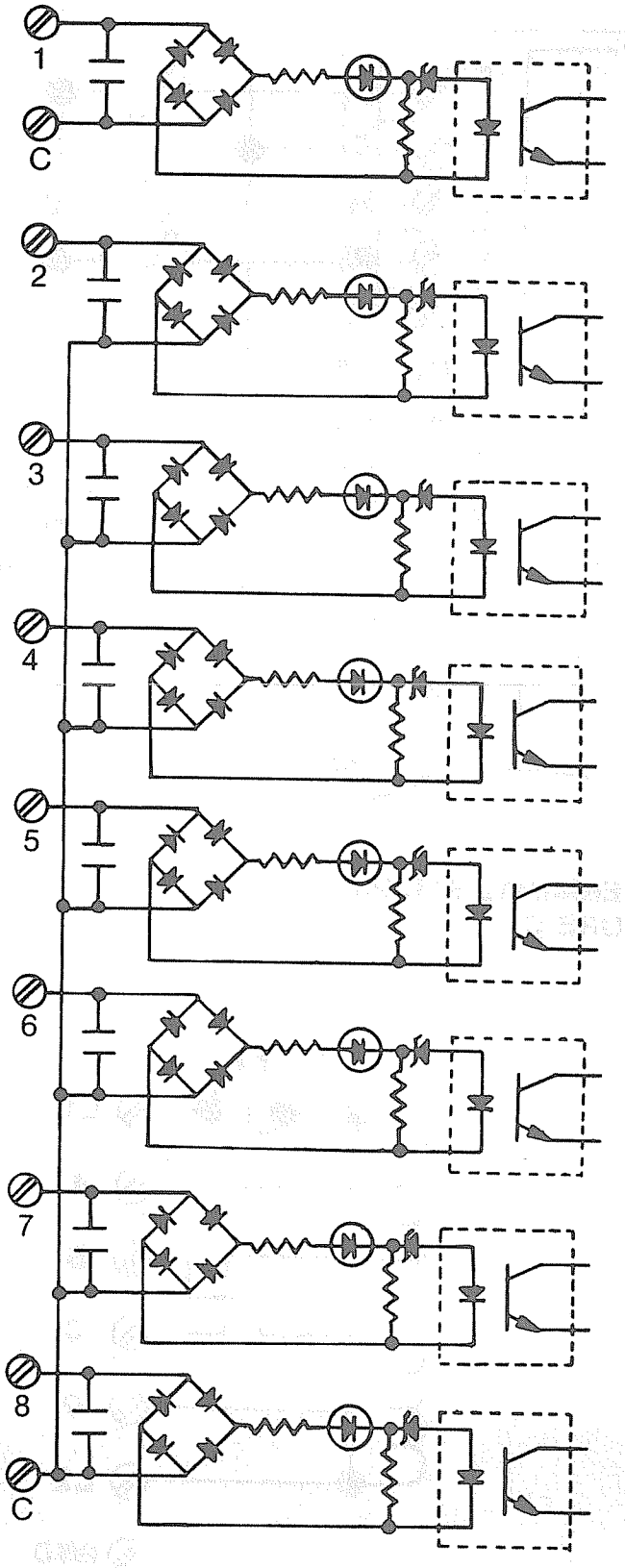

TYPICAL CIRCUIT OF AC/DC INPUT CARD
FIGURE E

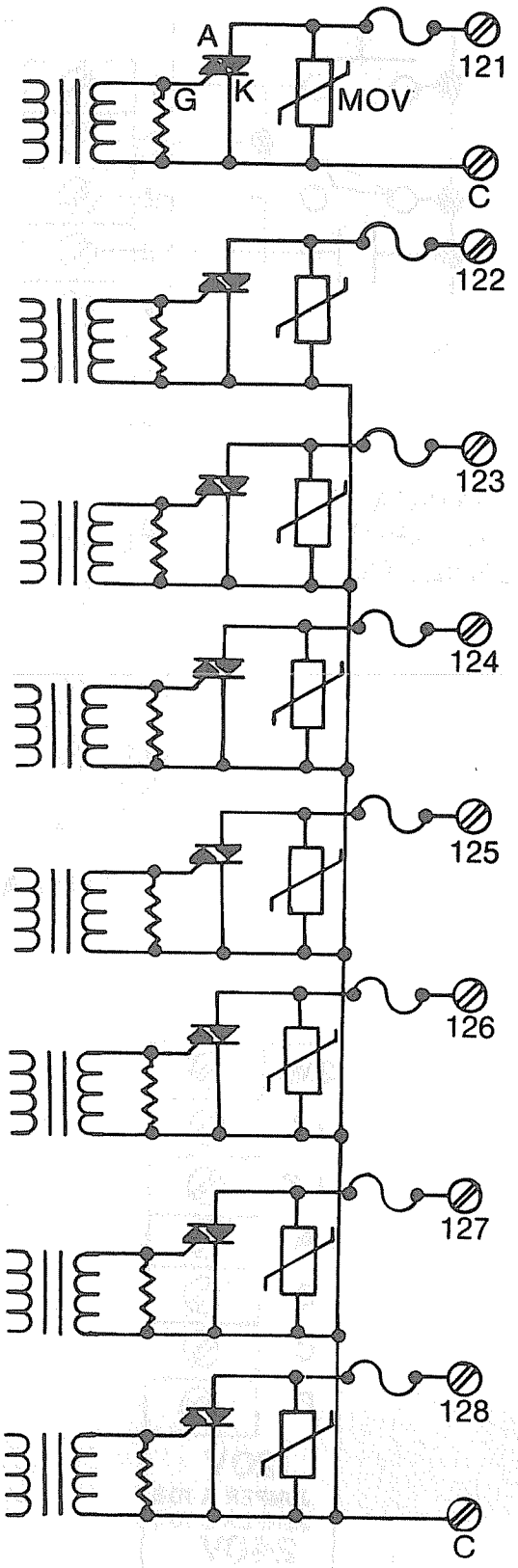

TYPICAL CIRCUIT OF AC OUTPUT CARD
FIGURE F

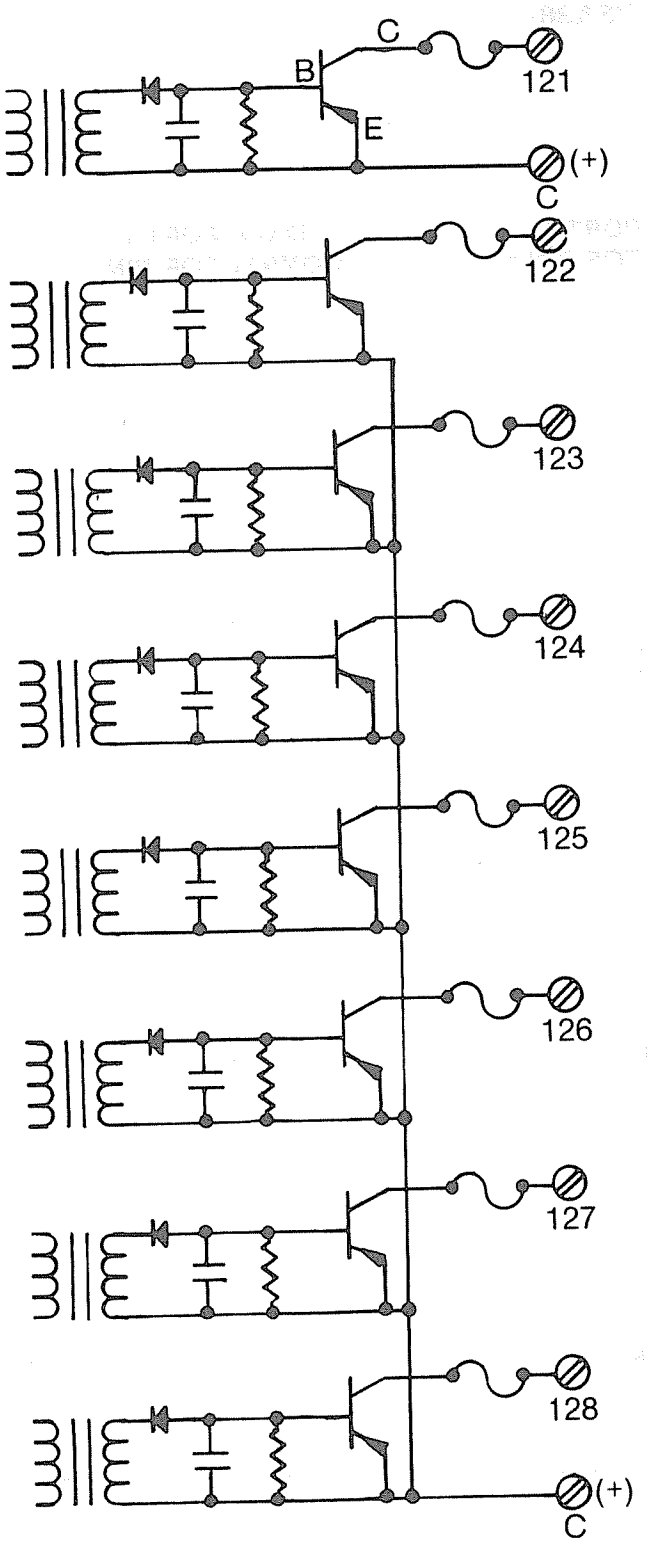

D.C. OUTPUT CARD CIRCUIT
PNP TRANSISTOR-POSITIVE COMMON
FIGURE G

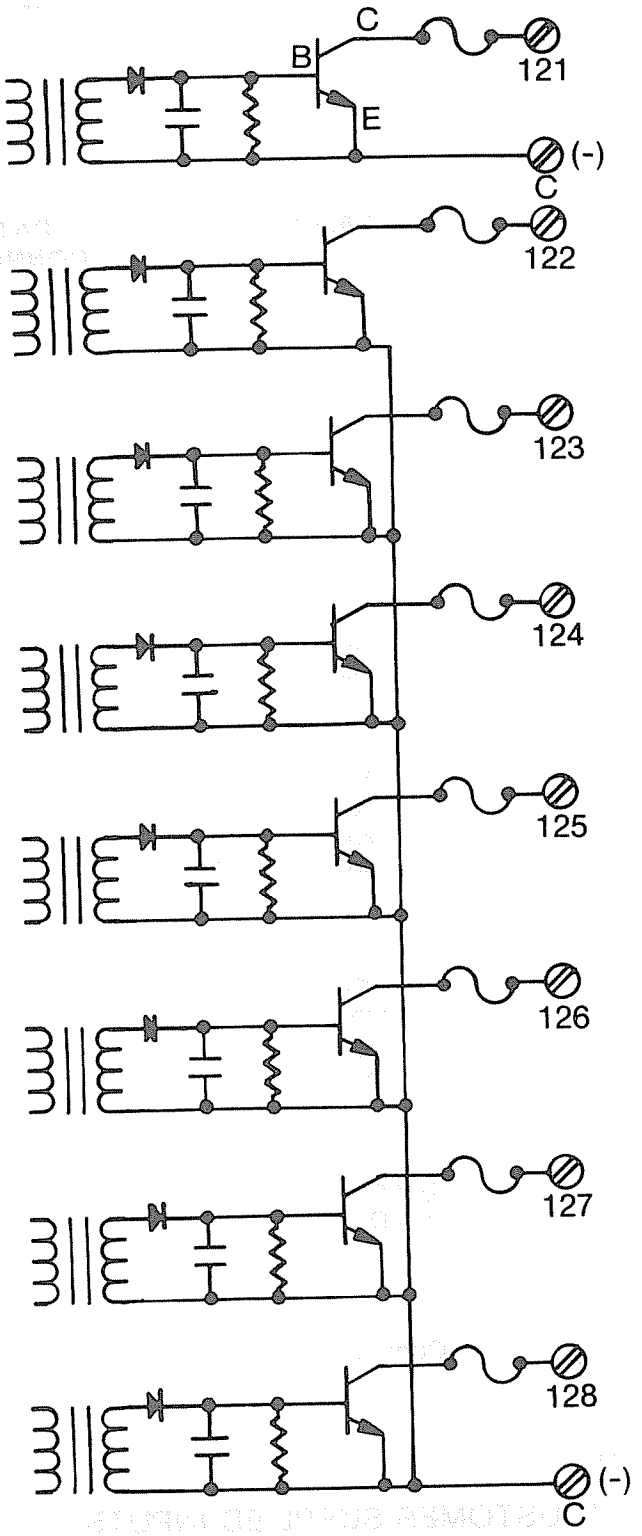

D.C. OUTPUT CARD CIRCUIT
NPN TRANSISTOR-NEGATIVE COMMON
FIGURE H

DATA INPUT CARD
CONNECTION INFORMATION
(P.N. 75A38)

BCD VALUE	DATA PORT 1 CONNECTOR PIN #	DATA PORT 2 CONNECTOR PIN #
1 2 4 8	1 A 2 B	9 K 10 L
10 20 40 80	3 C 4 D	11 M 12 N
100 200 400 800	5 E 6 F	13 P 14 R
1000 2000 4000 8000	7 H 8 J	15 S 16 T
Supply* (+5VDC)	17	U
Common*	18	V

*CUSTOMER SUPPLIED INPUTS
(1 AMP POWER SUPPLY CAPACITY WORST CASE PER INPUT CARD)

Figure I

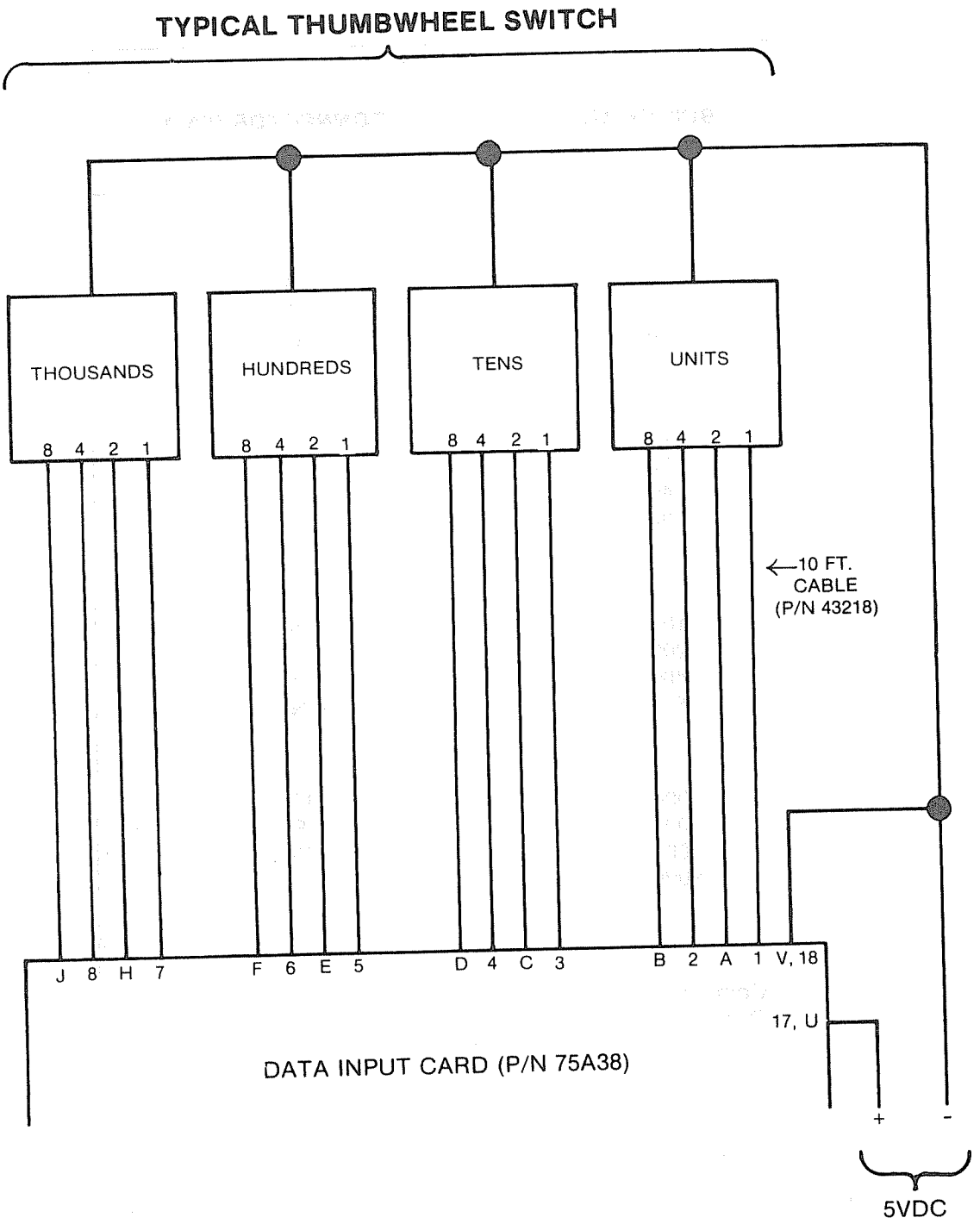

DATA INPUT CARD CONNECTION DIAGRAM
FIGURE J

DATA OUTPUT CARD
CONNECTION INFORMATION
(P.N. 75A39)

BCD VALUE	CONNECTOR PIN #
1	1
2	B
4	3
8	D
10	5
20	F
40	7
80	J
100	9
200	L
400	11
800	N
1000	13
2000	R
4000	15
8000	T
Common*	18
Common*	V

*CUSTOMER SUPPLIED

Figure K

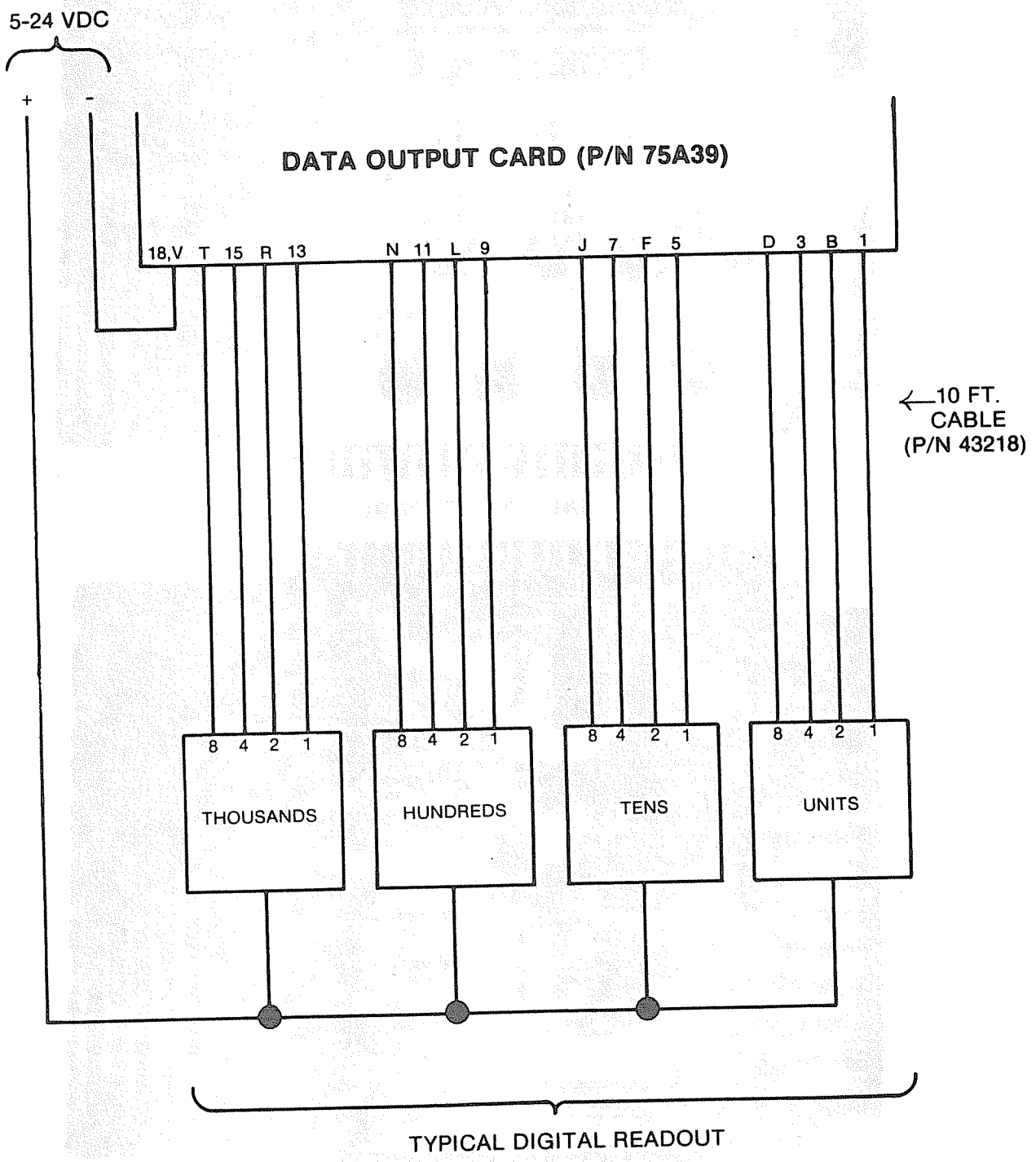

DATA OUTPUT CARD CONNECTION DIAGRAM
Figure L

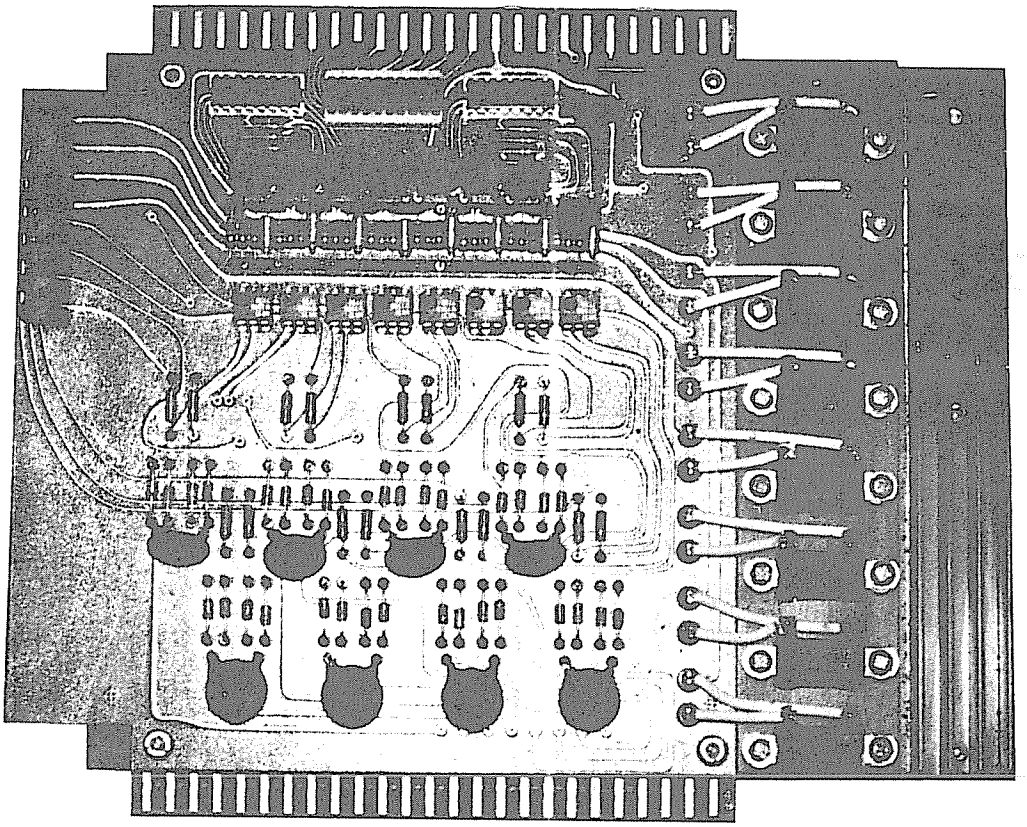

75A07 INPUT CARD

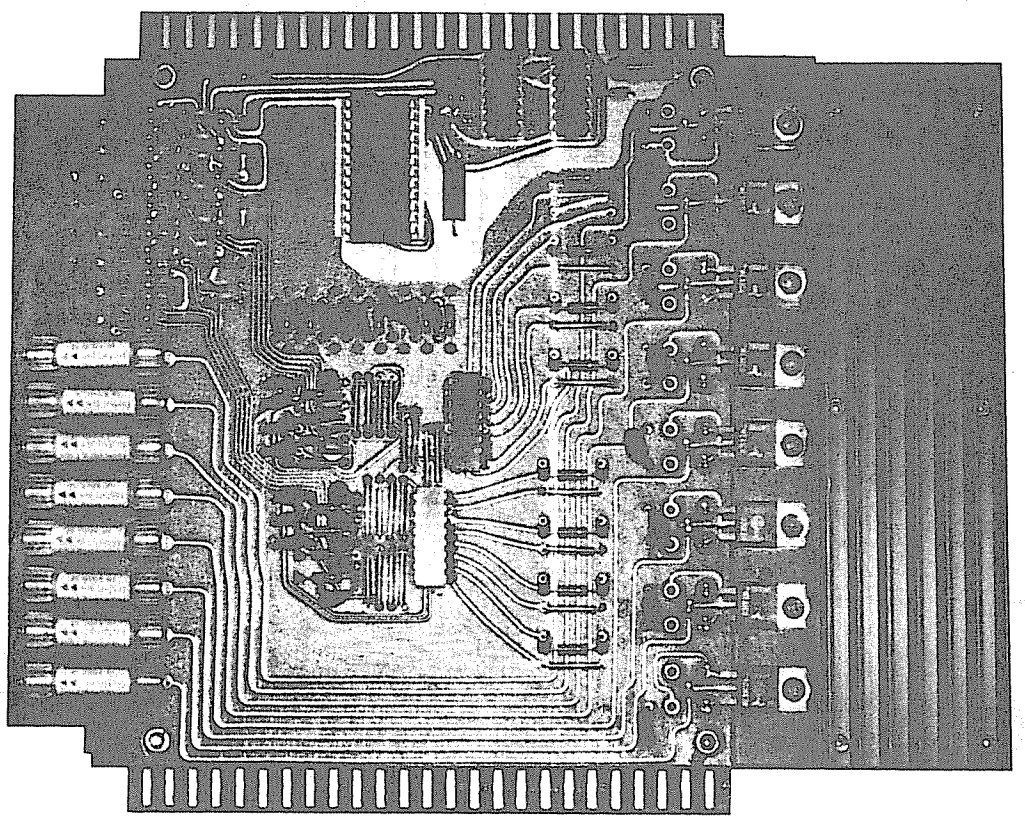

75A01 OUTPUT CARD

I/O CARDS
FIGURE M

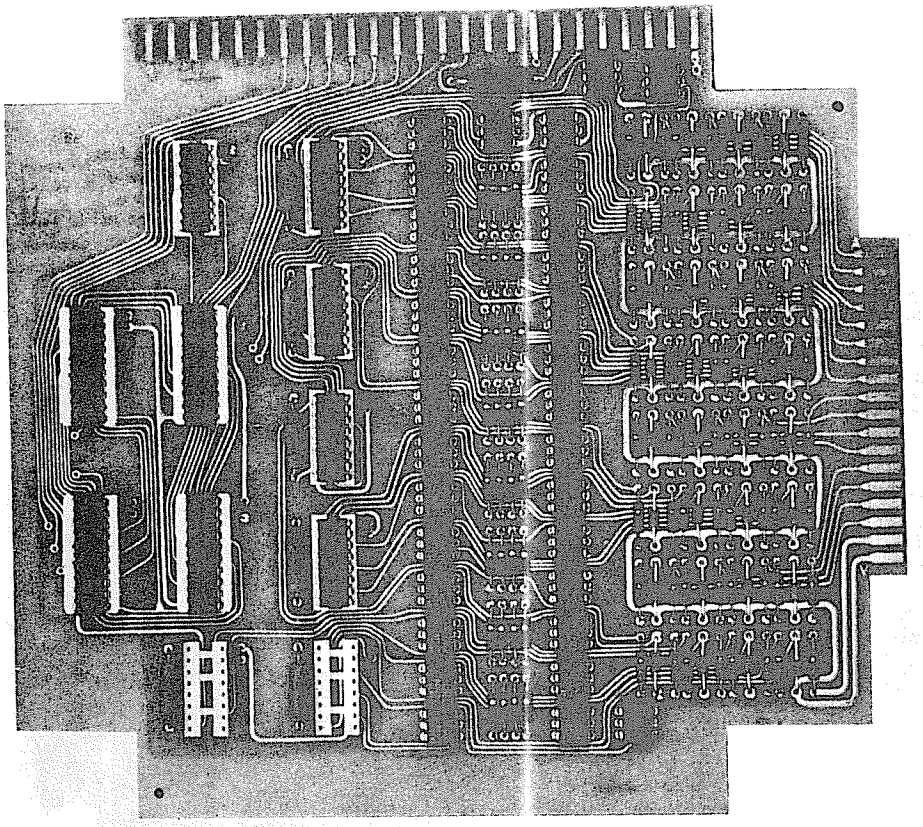

75A38 DATA INPUT CARD

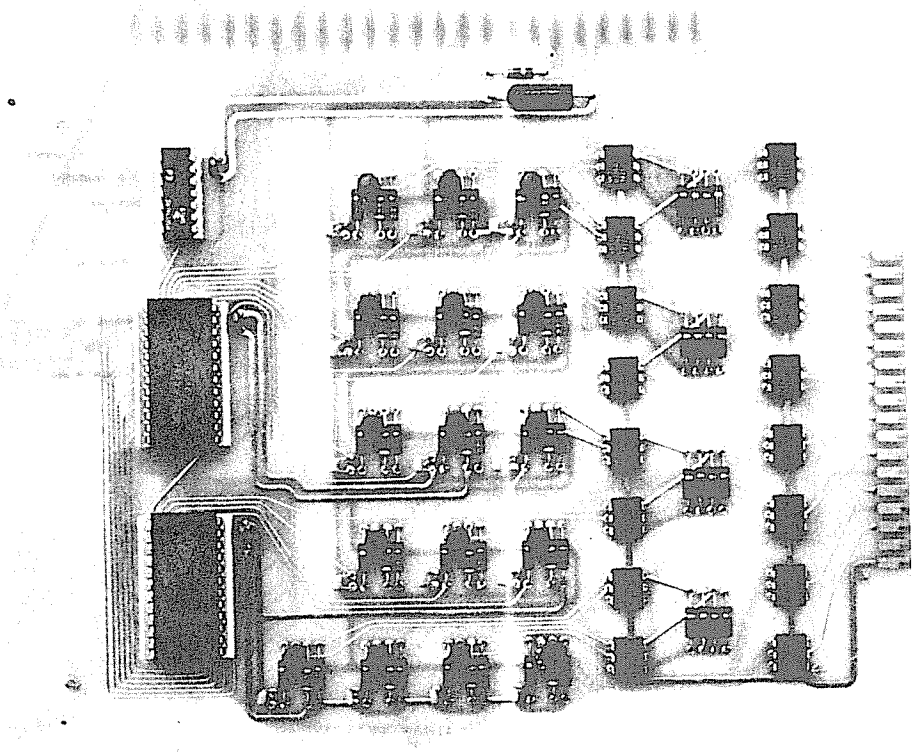

75A39 DATA OUTPUT CARD

DATA I/O CARDS
FIGURE N

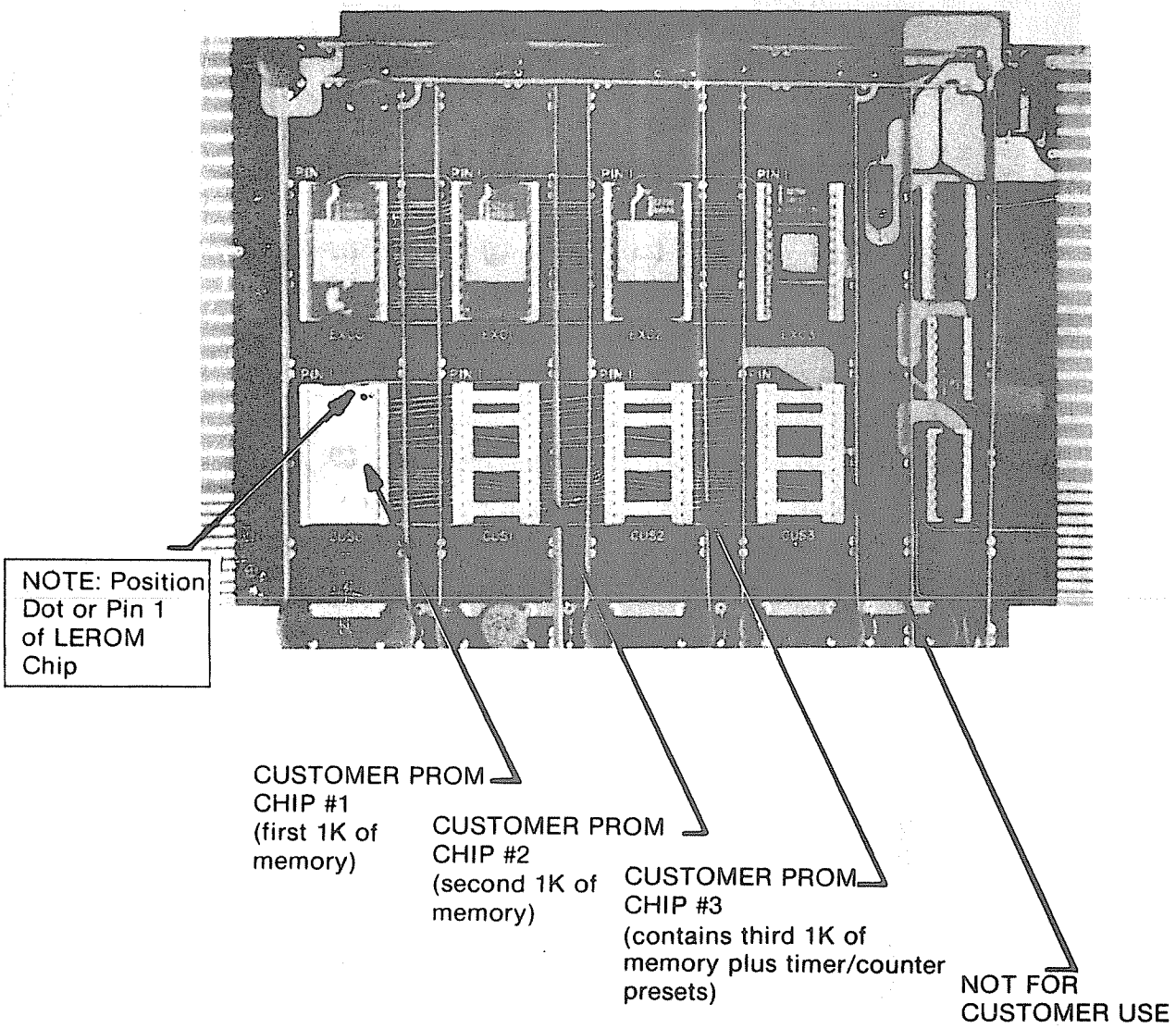

75A10 PROM CARD
FIGURE P

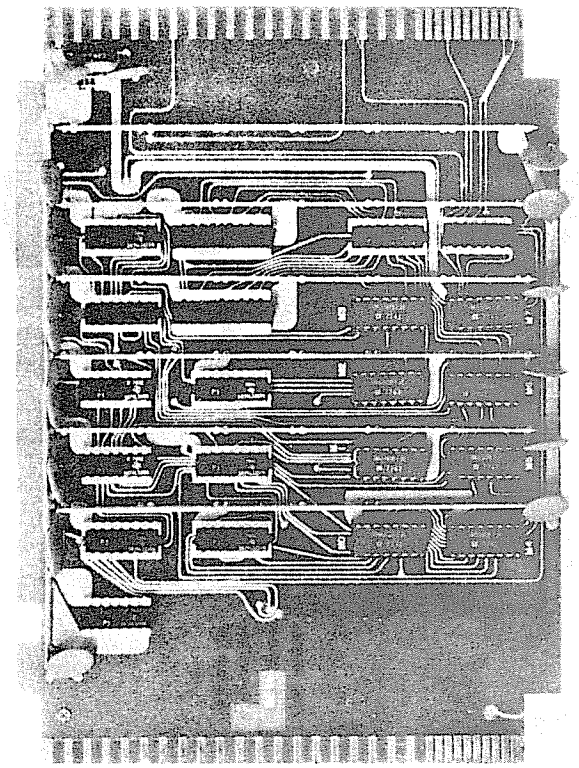

75A11 RAM CARD

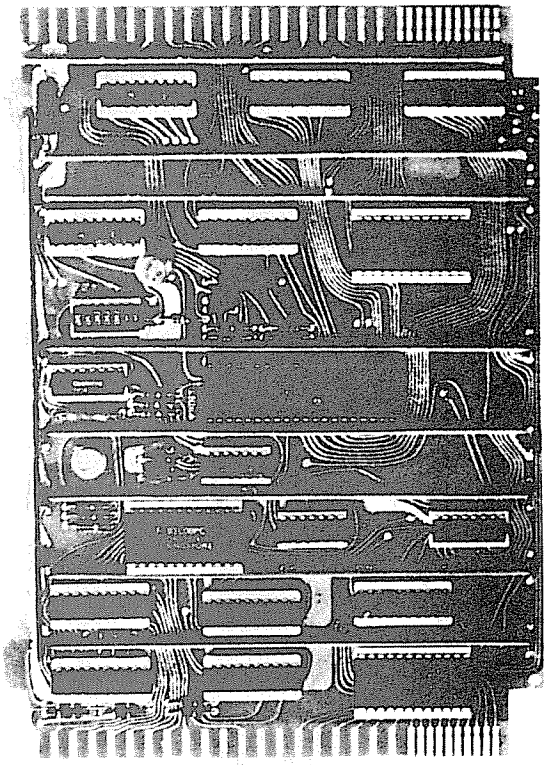

75A12 CPU CARD

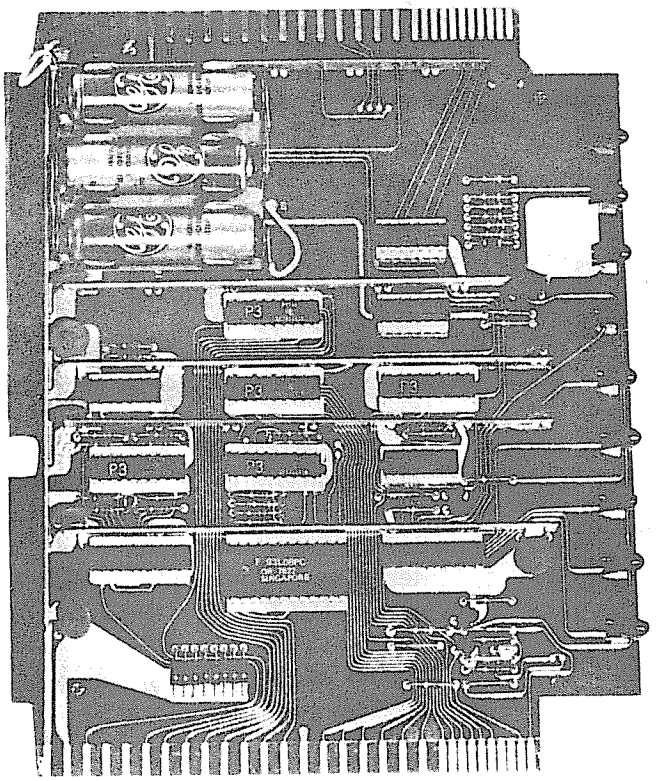

75A08 LINE DRIVER / BATTERY CARD

RAM, CPU AND LINE DRIVER CARDS
FIGURE Q

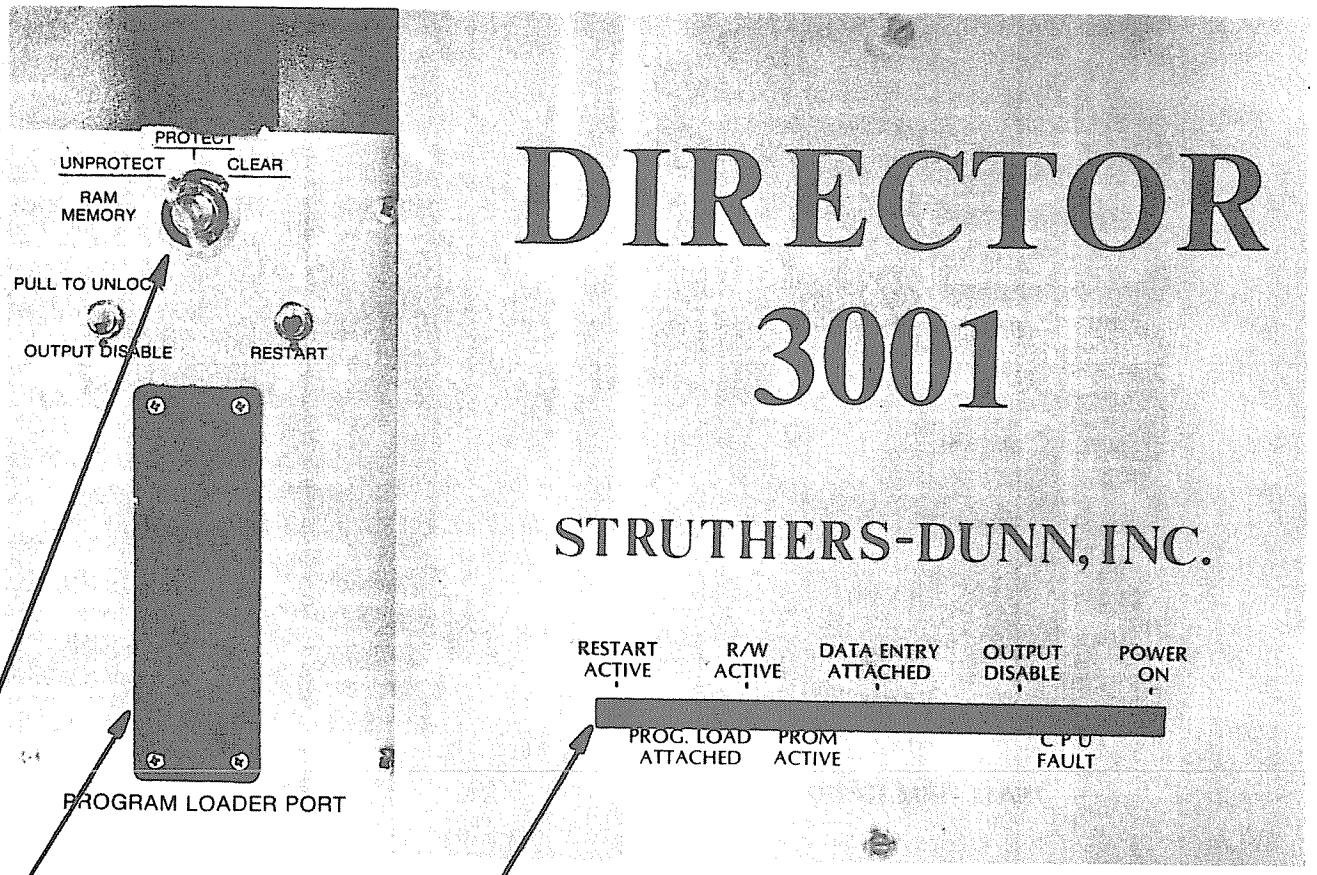

SOCKET for 43072 Program loader cable

RAM MEMORY Key Switch:

UNPROTECT position - allows entry of timer/counter presets.

PROTECT position - Timer/counter presets cannot be modified in the PROTECT position

CLEAR position - will set all timer/counter presets to zero and turn off all retentive latches when key switch is held in this position while the RESTART switch is depressed.

LED INDICATORS:

RESTART ACTIVE - on for short period of time when controller is powered up or RESTART switch is operated (during this time the controller will not respond to inputs, data entry panel or program loader.)

PROG. LOAD. ATTACHED - on when CPU recognizes program loader is connected (and powered up) to the controller

R/W ACTIVE - on when operating from R/W memory of the Program Loader

PROM ACTIVE - on when operating from LEROM in the controller

DATA ENTRY ATTACHED - on when CPU recognizes that the Data Entry/Monitor panel is connected

OUTPUT DISABLE - on when manual OUTPUT DISABLE switch is in disabled (down) position or when the CPU detects a fault internal to the controller

CPU FAULT - on when the CPU detects a fault internal to the controller

POWER ON - on when output of internal DC power supply is present

FIGURE R

MOUNTING SCREWS (4)

LIQUID CRYSTAL DISPLAY - 1st DIGIT - INDICATES FUNCTION NUMBER
2nd, 3rd, 4th DIGITS - INDICATES ADDRESS NUMBER

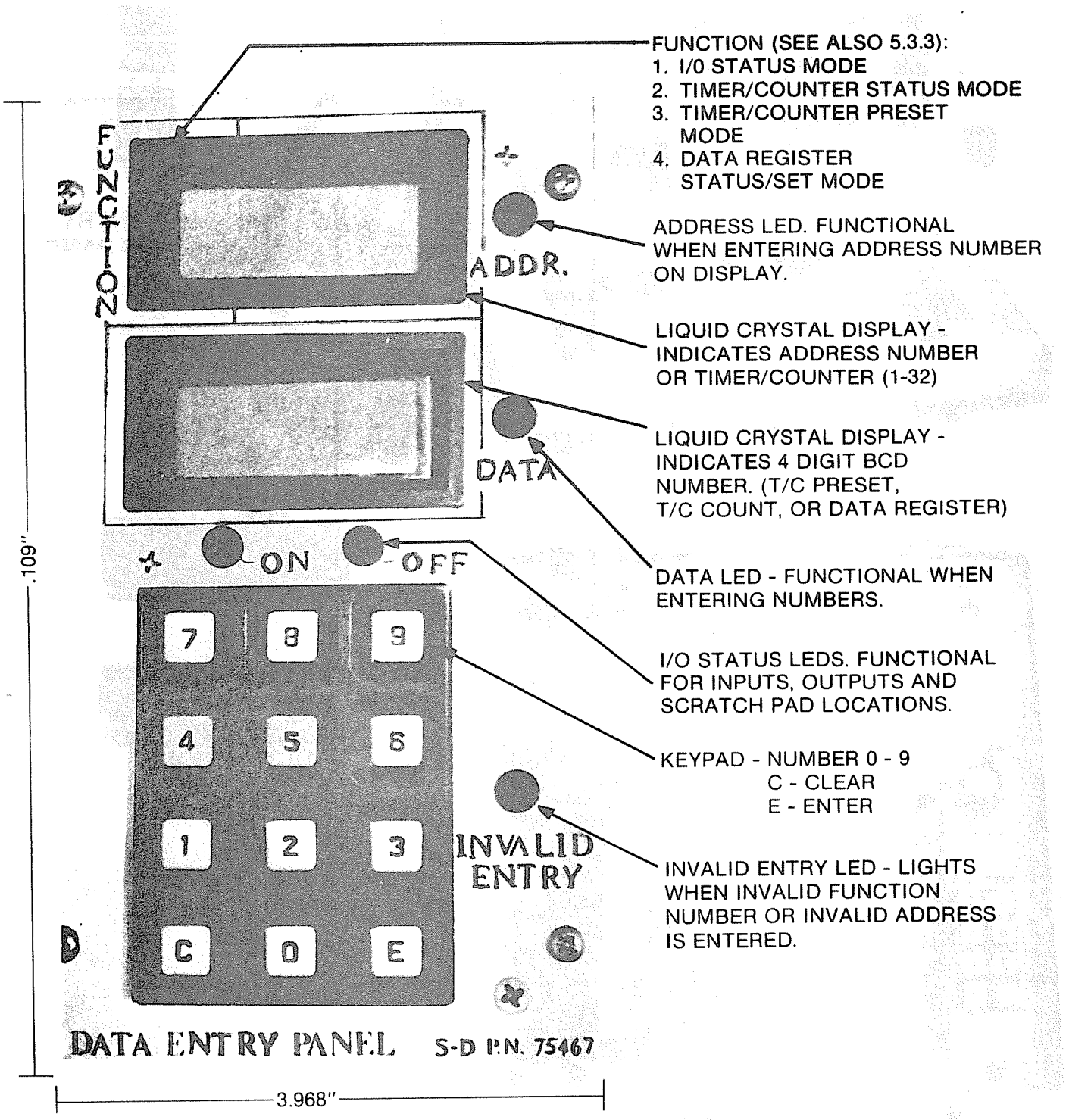

Depth = 2.575"
Weight = .75 lb.

DATA ENTRY/MONITOR PANEL
FIGURE S

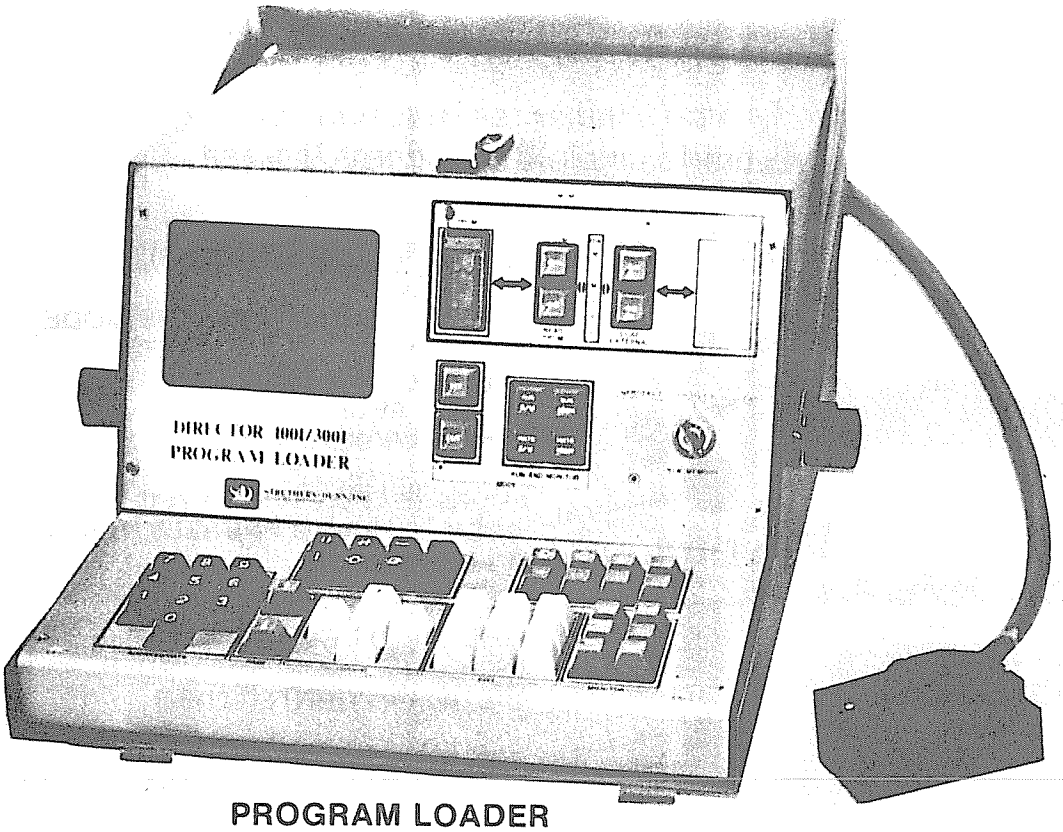

PROGRAM LOADER

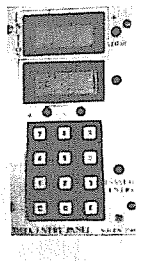

DATA ENTRY/
MONITOR PANEL

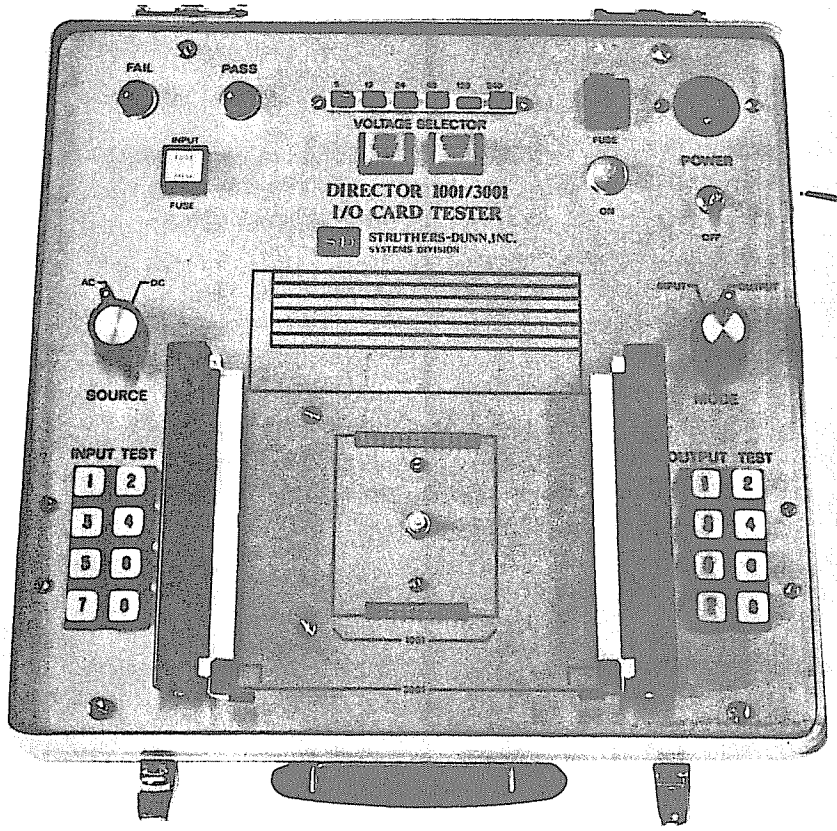

I/O CARD TESTER

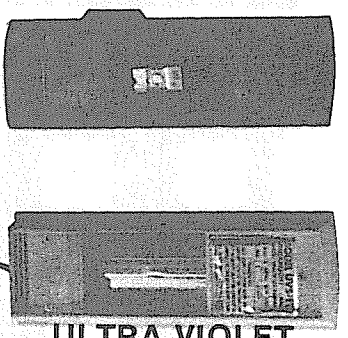

ULTRA VIOLET
ERASE LAMP

SUPPORT EQUIPMENT
FIGURE T

TABLE A
DIRECTOR 3001 ADDRESS

DESCRIPTION	ADDRESS NUMBER(S)	TOTAL NO. AVAILABLE
I/O (Groups of 8)	1 through 128	128
Internal Storage	150 through 253	104
I/O Data Ports (16 Bit)	D001 through D016	16
Internal Data Registers (16 Bit)	D101 through D164	64
Timers/Counters	300 through 939	32
Power on Reset (first scan)	990	1
ONE second time base	991	1
TEN second time base	992	1
SIXTY second time base	993	1

TABLE B
DIRECTOR 3001 TIMER/COUNTER ADDRESSES

TIMER	PRESET	CURRENT VALUE	OUTPUT CONTACT	START COIL*	HOLD COIL*	
COUNTER	PRESET	CURRENT VALUE	OUTPUT CONTACT	RESET COIL*	COUNT UP*	COUNT DOWN*
1	D201	D301	316	317	318	319
2	D202	D302	336	337	338	339
3	D203	D303	356	357	358	359
4	D204	D304	376	377	378	379
5	D205	D305	396	397	398	399
6	D206	D306	416	417	418	419
7	D207	D307	436	437	438	439
8	D208	D308	456	457	458	459
9	D209	D309	476	477	478	479
10	D210	D310	496	497	498	499
11	D211	D311	516	517	518	519
12	D212	D312	536	537	538	539
13	D213	D313	556	557	558	559
14	D214	D314	576	577	578	579
15	D215	D315	596	597	598	599
16	D216	D316	616	617	618	619
17	D217	D317	636	637	638	639
18	D218	D318	656	657	658	659
19	D219	D319	676	677	678	679
20	D220	D320	696	697	698	699
21	D221	D321	716	717	718	719
22	D222	D322	736	737	738	739
23	D223	D323	756	757	758	759
24	D224	D324	776	777	778	779
25	D225	D325	796	797	798	799
26	D226	D326	816	817	818	819
27	D227	D327	836	837	838	839
28	D228	D328	856	857	858	859
29	D229	D329	876	877	878	879
30	D230	D330	896	897	898	899
31	D231	D331	916	917	918	919
32	D232	D332	936	937	938	939

*These address may be used as additional scratch pad (if the timer/counter is not being used) by designating the coil as a timer or counter.

TABLE C
FUSE RATING CHART

OUTPUT CARD P/N	FUSE RATING		FUSE P/N
75A32	GBA-3	3 Amp	27624
75A01	GBA-3	3 Amp	27624
75A03	GBA-3	3 Amp	27624
75A30	GBA-3	3 Amp	27624
75A02	GBA-1.5	1.5 Amp	27625
75A35	GBA-1.5	1.5 Amp	27625
75A36	GBA-1.5	1.5 Amp	27625
75A37	GBA-1.5	1.5 Amp	27625
Controller main power line fuse	5AGC	5Amp	27605

OPERATIONAL DESCRIPTION AND INSTRUCTIONS FOR THE VICON TOUCH-SENSITIVE CONTROL PANEL

The following information describes the operation and functions of the VICON touch-sensitive control panel.

The touch-sensitive panel was designed and fabricated by Sal Roditi, NAFEC Engineer, and will be tested to evaluate the practicability of a touch-sensitive switch device controlled by digital logic.

The appearance of the panel is similar to the "MIMIC" panel and consists of a graphic overlay which depicts the various touch switches and indicator lights. Printed circuit boards lay beneath the overlay. These circuit boards contain pliable plastic membranes which, when LIGHTLY PUSHED, cause two conductors to short, thus activating internal digital logic.

Figures 1,3,and 4, are for training purposes and, for the description of the function or operation, lettered for identification. Figure 2 is marked with the same identification found on the actual touch-sensitive control panel. Refer to Figure 5 for the layout of Bradley International Airport.

I. Turning the VICON System ON or OFF

There will always be power supplied to the control panel. There is no ON/OFF switch on the panel except for the OFF touch switch pertaining to the remote control unit. The panel is designed so the local controller may activate only those touch switches controlling those departure points on the active runway or runways. All other VICON light cluster touch switches will be dead, or unusable, thus, lessening the possibility of accidentally illuminating the wrong VICON light cluster.

A. Runway Activation - To activate the VICON System on the appropriate departure runway or runways, LIGHTLY TOUCH the "Runway Activation Touch Switch" (Touch Switch A, figures 1,3,and 4). The runway activation touch switch to be touched is that A-switch marked for the runway or runways designated as "active".

EXAMPLE:

To activate runway 06, lightly touch the A-switch marked "ACT 6". A green light will appear in the upper right portion of the runway activation switch area (H, fig.1,3,&4).

Also, the VICON cluster location indicators(I, figures 1,3,&4) will light with an "amber" light. Only departure points that can be used in that direction of operation will become active. Only indicators that are lighted "amber" can operate a VICON cluster. All other VICON cluster activation touch switches will be "dead" and will not turn on a cluster if touched.

B. Runway Deactivation - In the event the system is to be turned off, or a runway selection changed, touch the "Runway Activation Touch Switch" (A, fig. 1,3,&4) on the runway which is to be deactivated. This action will deactivate all VICON cluster location indicators that were lighted amber and the green light on the upper portion of the Runway activation touch switch will go out.

If a runway change is being made, go to step A and touch the appropriate Activation Touch Switch or switches for the new active runway or runways.

II Operation of the VICON System.

Once the VICON switches on the active runway/runways have been activated, (E touch switches, fig. 1,3,&4), Operation of the system is accomplished in the following manner:

1. Clear the aircraft for takeoff using present prescribed and published procedures.

2. Concurrently, or immediately thereafter, touch the VICON Light Cluster Activation Touch Switch, (E, fig. 1,3,&4), corresponding to the departure point being used by the departing aircraft. The amber light on the cluster location indicator (I fig. 1,3,&4) will go out and at the same time, a green arrow, showing the departure direction (K, fig. 3 and 4) will go on. A signal was now sent through the system to the field equipment, when the circuits had been completed and the VICON light cluster was illuminated, a signal was sent from the field back to the control tower. Upon receipt of this signal by the equipment in the tower, a green flashing light was illuminated (J, fig. 1,3,&4). This green flashing light is part of the system monitor, if the green flasher does not appear after an activation of a cluster activation touch switch, this signals a malfunction in the system for the VICON lights at that departure location.

The green indications will remain on until the electronic device being used for that departure point, turns the VICON lights off. At that time, the "green" identity will go out and be replaced by the "amber" identity.

III. Cancellation of Takeoff Clearance

In the event a takeoff clearance must be cancelled:

A. Cancel the takeoff clearance by voice radio instruction in accordance with prescribed published procedures.

B. Cancel the VICON light by touching the "Override" touch switch (touch switch F, fig. 1,3,&4).

The override touch switch will immediately turn off any VICON light cluster which may be on at the time and will reset the control panel for immediate reuse. If more than one VICON cluster was on, the override feature will turn all VICON light clusters off when it is touched.

The override may also be used in the event the system is operating too slowly. There may be occasions when an aircraft is to be placed on a runway immediately behind a preceding departure. To preclude placing the second aircraft on the runway with a VICON cluster still operating, the VICON light can be deactivated by using the override touch switch prior to having the second aircraft taxi into position.

IV. Testing the Control Panel and VICON Touch Switches

A complete test of the VICON control panel and system should be accomplished at least once each 24 hours, preferably during the mid-watch. The control panel and VICON system should also be tested at least once each watch, however, this test can be limited to that portion of the panel and system for the present runway configuration.

A. Lamp Test (Touch-Sensitive Control Panel Lamps)

This test should be accomplished during the 24 hour check and the watch check. Procedure and actions required will be the same for either the 24 hour check or the watch check.

Touch the lamp test touch switches one at a time, (Touch switches "B", fig. 1,3,&4), for each runway. Visually check all switch and indicator lights on the VICON panel. The test touch switch, when touched, will illuminate all switch and indicator lamps, both amber and green. If for any reason a switch or indicator lamp does not light, notify the Comm. Unit of the maintenance sector.

Malfunction of the switch or indicator bulbs is considered a failure of low priority. In the event a failure of a bulb is discovered during the time the Comm. Unit personnel are not on duty, (Mid-watch), the reporting of this failure can be delayed until such time the Comm. Unit personnel report for duty.

Note that all other operating procedures and maintenance procedures concerning the touch-sensitive control panel light intensity settings, malfunctions, and maintenance notification procedures are the same as those covered in the original Operational Instructions and Description For The VICON Control Panel Document.

B. Remote Control Unit - The light weight remote control unit was designed to provide the controller with the ability to use the VICON system with some freedom of mobility. This unit will allow the control of the VICON lights at two locations(Runway ends)known as "Primary" and "Secondary" departure points.

The remote control unit should be checked at least once each watch. The test procedure is as follows:

1. Select the primary and secondary runways by touching the corresponding touch switches located under "C" and "D" (fig. 1,3,&4).

2. Depress the primary switch on the remote unit, observe the operation of the coresponding switch on the control panel. Observe the "green " indicator light come on over the runway selected. ("C", fig.1,3,&4)

3. Depress the secondary switch on the remote control unit and observe the operation of the coresponding switch on the control panel. Observe the "green" indicator light come on over the runway selected, ("D", fig. 1,3,&4).

4. When changing either primary or secondary runway selections, it is not necessary to touch the "OFF" switch prior to touching another selection.

NOTE - The Primary and Secondary departure points used by the remote control units relate to the runways ends only. Since these points are deactivated by the micro wave system, it will be necessary to touch the override switch to manually deactivate the system during a test.

TOUCH SWITCH AND LIGHT INDICATOR

LEGEND

FOR FIGURES 1, 3, & 4

A RUNWAY ACTIVATION TOUCH SWITCH

B LAMP TEST

C PRIMARY SELECT CONTROL INDICATOR

D SECONDARY SELECT CONTROL INDICATOR

E VICON LIGHT CLUSTER ACTIVATION TOUCH SWITCH

F OVERRIDE TOUCH SWITCH

G LIGHT CLUSTER INTENSITY CONTROL INDICATORS

H GREEN LIGHT INDICATOR WHEN RUNWAY ACTIVATION TOUCH SWITCH (A) IS TOUCHED

I AMBER LIGHT INDICATOR - corresponds to runway activated

J GREEN LIGHT INDICATOR - corresponds to cluster activated

K GREEN ARROW - corresponds with green light indicator(J)

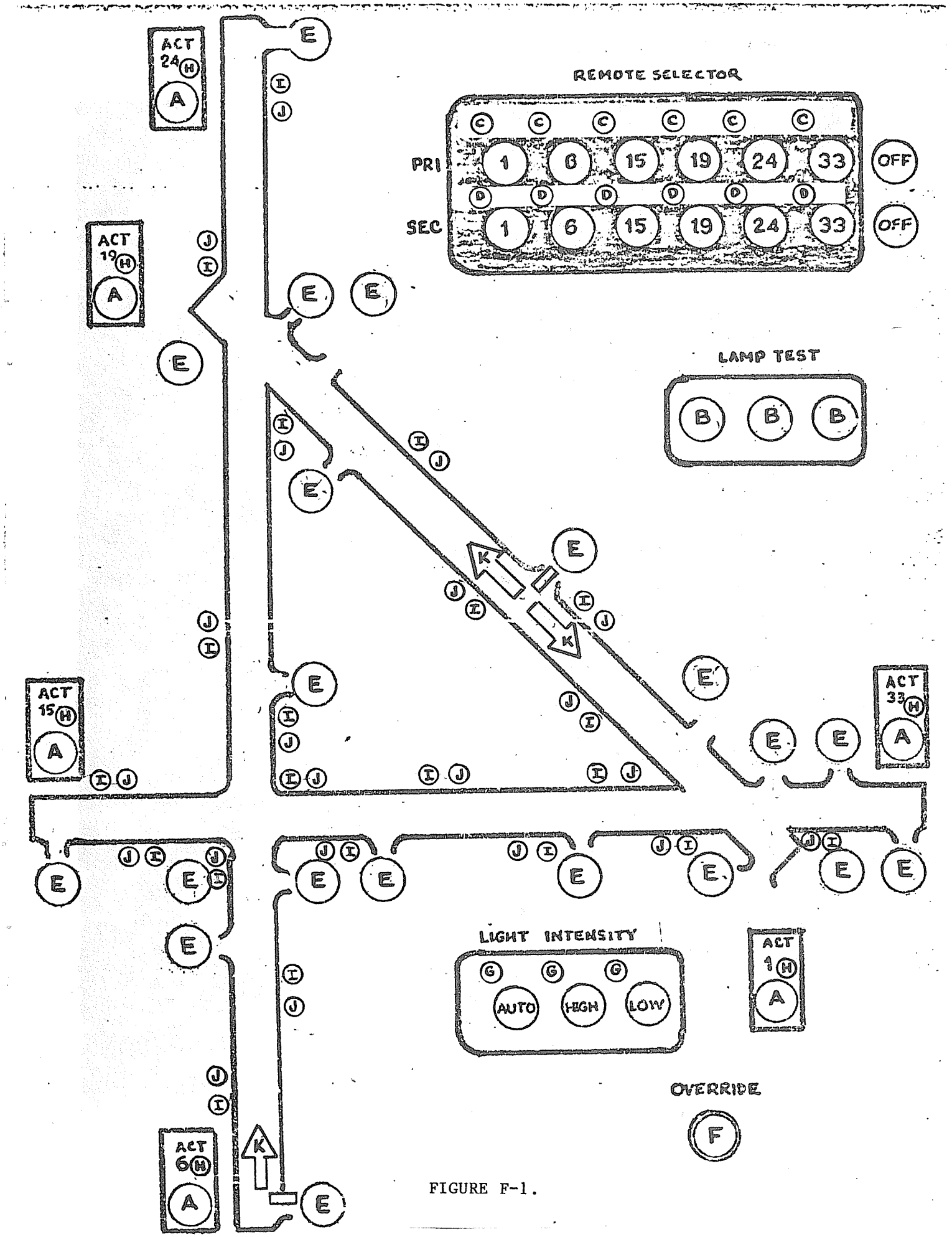

FIGURE F-1.

TOUCH-SENSITIVE CONTROL PANEL

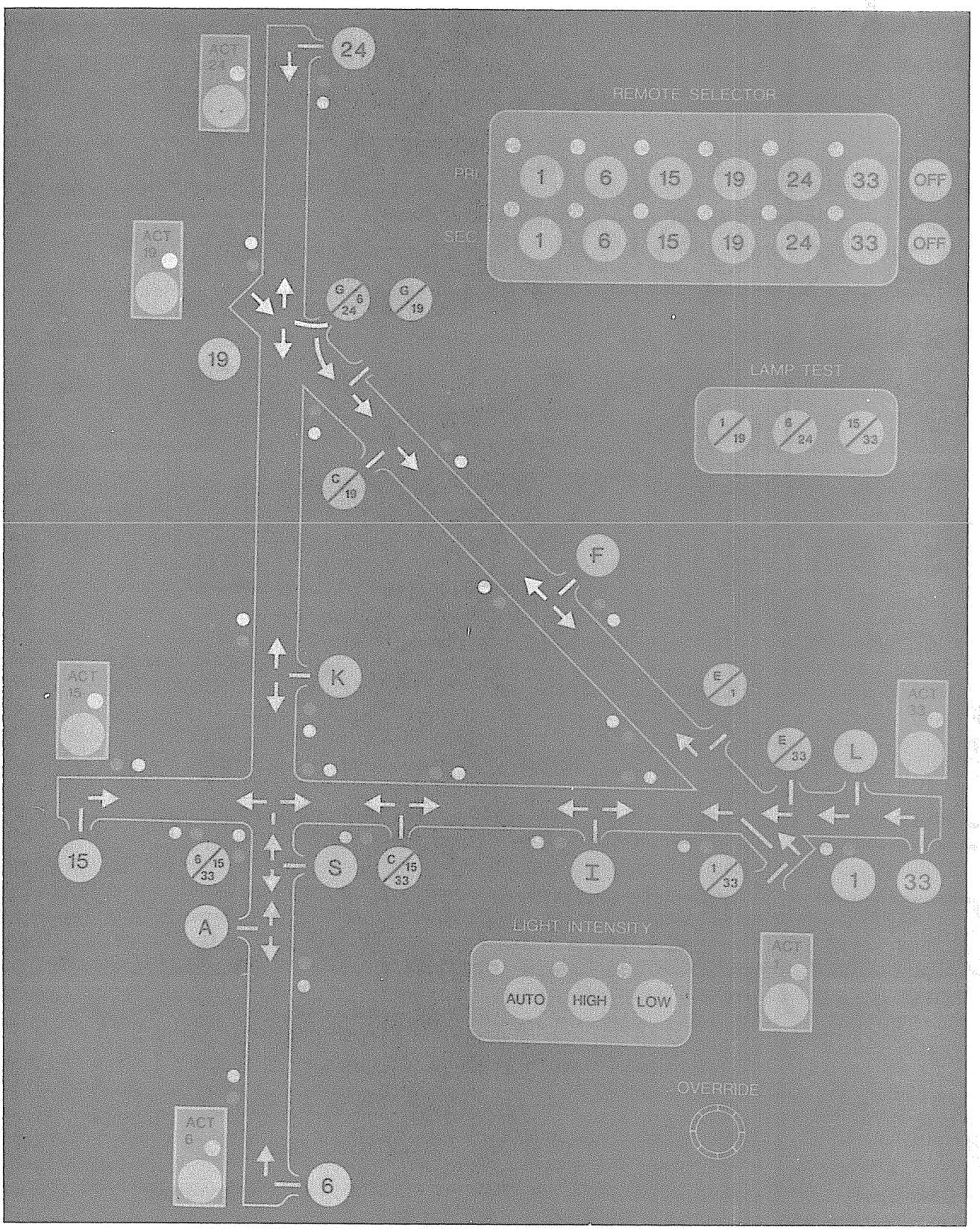
REMOTE SELECTOR
PRI
SEC
1
6
15
19
24
33
OFF
LAMP TEST
LIGHT INTENSITY
AUTO
HIGH
LOW
OVERRIDE
24
19
F
K
L
15
S
I
A
6
1
33

FIGURE F-2

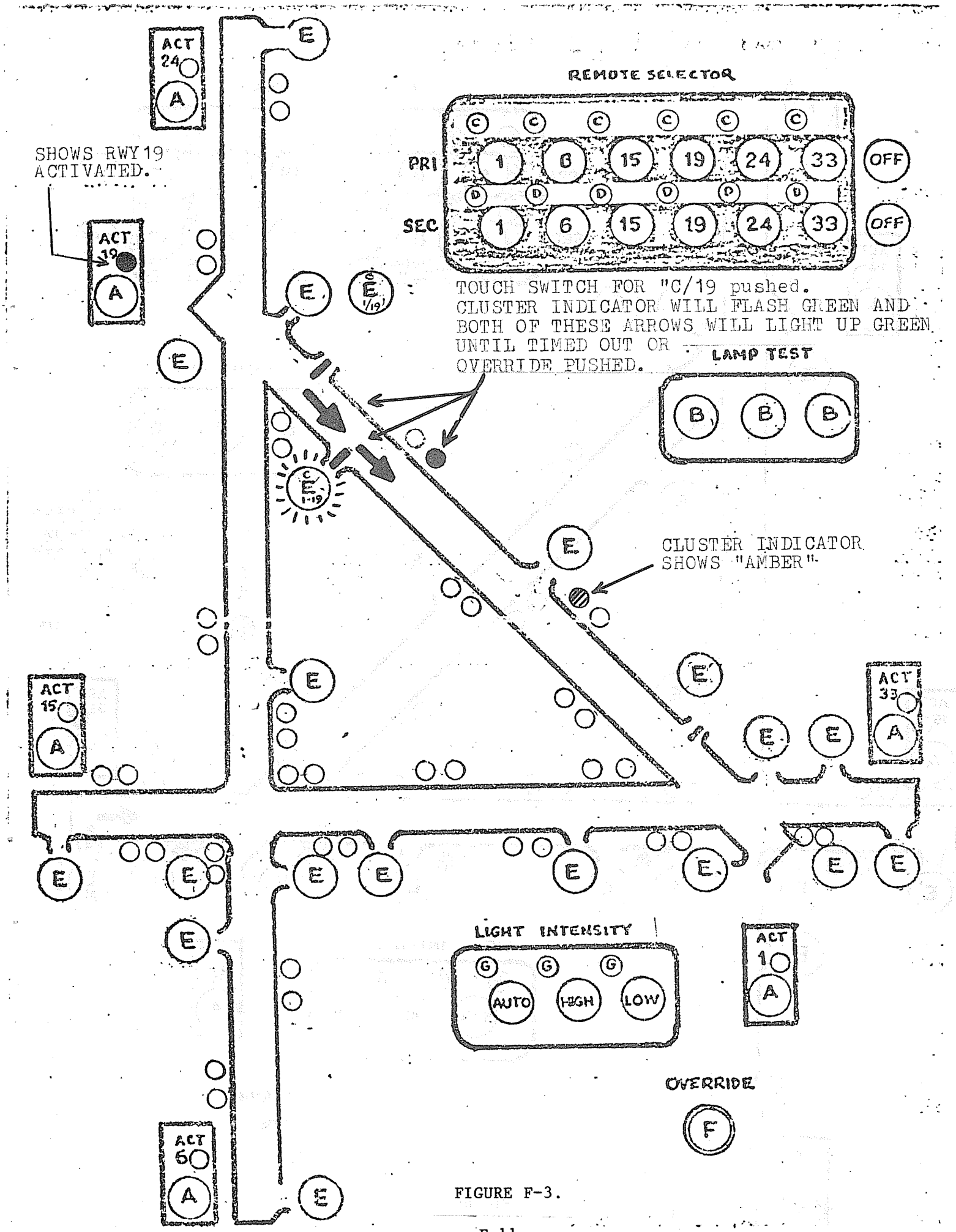
REMOTE SELECTOR
PRI
SEC
1
6
15
19
24
33
OFF
SHOWS RWY 19 ACTIVATED.
ACT 24
ACT 19
ACT 15
ACT 33
ACT 1
ACT 6
TOUCH SWITCH FOR "C/19 pushed. CLUSTER INDICATOR WILL FLASH GREEN AND BOTH OF THESE ARROWS WILL LIGHT UP GREEN UNTIL TIMED OUT OR OVERRIDE PUSHED.
LAMP TEST
CLUSTER INDICATOR SHOWS "AMBER".
LIGHT INTENSITY
AUTO
HIGH
LOW
OVERRIDE

FIGURE F-3.

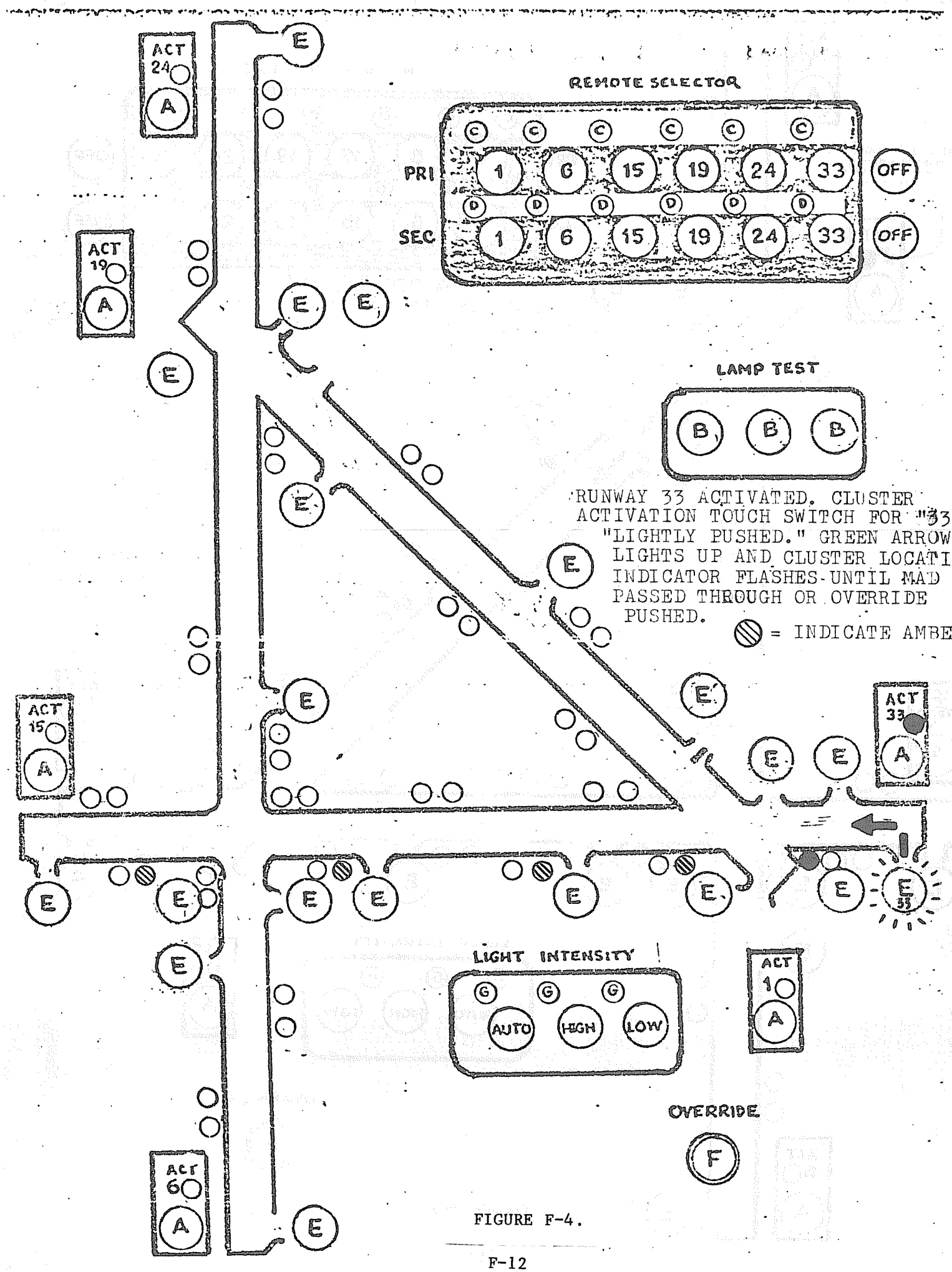
REMOTE SELECTOR
PRI
SEC
1
6
15
19
24
33
OFF
LAMP TEST
B
RUNWAY 33 ACTIVATED. CLUSTER ACTIVATION TOUCH SWITCH FOR "33" "LIGHTLY PUSHED." GREEN ARROW LIGHTS UP AND CLUSTER LOCATION INDICATOR FLASHES UNTIL MAD PASSED THROUGH OR OVERRIDE PUSHED.
= INDICATE AMBER
ACT 24
ACT 19
ACT 15
ACT 33
ACT 1
ACT 6
A
E
LIGHT INTENSITY
G
AUTO
HIGH
LOW
OVERRIDE
F

FIGURE F-4.

VISUAL CONFIRMATION OF VOICE TAKEOFF CLEARANCE

VICON

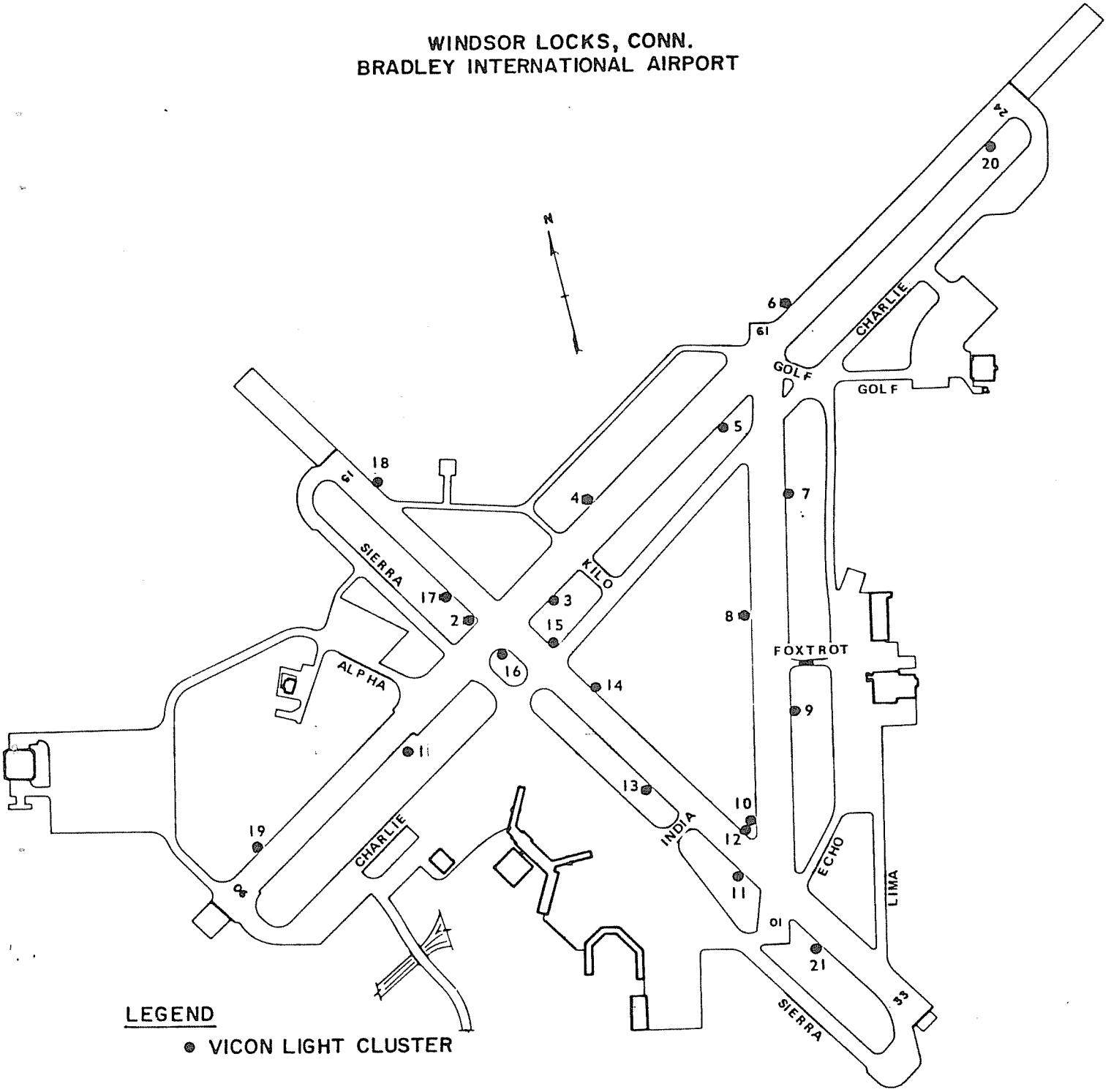

FIGURE F-5.

APPENDIX G

CONTROL TOWER CAB CONTROL PANEL (TOUCH-SENSITIVE) AND INTERFACE EQUIPMENT OPERATION AND MAINTENANCE DESCRIPTION

APPENDIX G

VISUAL CONFIRMATION OF VOICE TAKEOFF CLEARANCE

(VICON)

CONTROL TOWER CAB CONTROL PANEL (TOUCH-SENSITIVE) AND INTERFACE EQUIPMENT OPERATION AND MAINTENANCE DESCRIPTION

By Salvador Roditi

INTRODUCTION

At the onset of testing the VICON system for its compatability to control tower operation, it was decided to build and evaluate as many different control panels as possible. This would provide an option for future control towers that were "space" consious. Our approach led us in two basic directions:

1. Mechanical switches and contacts in conjunction with relay timers and relay circuitry.
2. Touch-sensitive switches using digitally controlled circuitry.

Because of the time and cost factor associated with producing a working panel, only the above mentioned directions were introduced with any great detail. A "matrix" and "mimic" type arrangement of switches were both used with the mechanical type switches and relays. The Touch-sensitive switches employed a "mimic" configuration in its representation of the airport.

DISCUSSION

When designing the touch-sensitive controller panel, various factors were considered so as to gain maximum controller acceptance and system compatability. These included:

1. Reliability
2. Ease of Operation
3. Future application
4. Cost

With a balance of these factors, a working panel was constructed and installed at Windsor Locks Conn. Main areas in the development of the touch-sensitive panel are as follows:

1. Graphic overlay design
2. Digital logic design
3. Touch-sensitve switches and bulb selection
4. Interfacing into existing equipment
5. Construction and assembly of compact unit

Graphic Overlay Design

The touch-sensitve panel was manufactured using a custom switch configuration and a layout pattern resembling Bradley Field. All markings are on a black background with a special "Finish and diffuser" used to improve the contrast ratio. The runways are outlined in white with openings near the approximate takeoff positions. Momentary switches for takeoff are identified, marked by white circles, and located near these openings. The controlled functions such as: remote selector (pri. & sec.), runway lamp test, light cluster intensity, and runway activate switches are surrounded by blue fields in white outlines.

The laminated graphic overlay incorporates portions of back lighting and display filters for lamp illumination. When backlit, green and amber filters are used to describe different functions. Amber lights appear on the left of all takeoff positions of an active runway. When the light cluster in the field is enabled, the amber light will shut off and a green one begins flasking. An arrow will also appear in the runway showing the intended place and direction of takeoff. After a preset time interval, the takeoff position will be reset. The status of the active runway, remote selector (pri. & sec.), and light cluster intensity is indicated by a green light near the appropriate switch. The lamp test and override switches have no individual indicators.

All the graphics are bonded and displayed on a 14.75" X 11.0" X 0.017" thick area. If necessary, the overlay is easily replaceable with a spare.

Digital Logic Design:

The construction and design of the digital circuitry for runway control was divided into three parts; runways 1 & 19, runways 6 & 24, runways 15 & 33. Since the controllers required complete control of VICON system operation, no automatic safeguard functions were included. All runways and their corresponding takeoff position switches are independant from one another. Possible automatic functions to be built-in include: one takeoff clearance at a time, check for conflicting takeoffs, time delay between takeoffs.

The internal circuitry is similar for all six runways but differs in its specific operation. Momentary runway activate switches (ACT 6, ACT 24, etc.) control "dual retriggerable monostables" for turn on/off of particular runways. J - K flip flops are used to "remember" the status of these active runways. The outputs from the J - K flip flops are parceled out among various TTL gates enabling operation of different sections in the digital circuitry. Positve 2-input NOR gates use these signals plus one from their takeoff position switch for turning on the field light cluster. A relay driver (SN75468) receives a "high" signal from the NOR gate (or AND gate) and energizes the relay that controls that light cluster. At the same time, the takeoff signal is gated from the NOR gate through an inverter to an S-R latch. This latch controls the lamp drivers (SN75468) that turns the amber light off and the green line-arrow on. Once the light cluster begins flashing, a signal is returned to the panel that starts flashing a green light at the same rate. All this occurs in less than one second. After a predetermined time interval, the S-R latch receives a signal that resets that particular takeoff position. In special instances where more than one switch controls a light cluster, OR and AND gates are used to channel the traffic. At times, signals are also sent between runways because of the interrelation of some takeoff positions.

The lamp test switches are designed to light all the bulbs of their particular runway. The signal is inverted and sent through a relay driver (SN75468), thus energizing a relay to light the lamps. The light cluster intensity switches operate in a similar manner. The only differance being that the energized relay sends a ground line out to the field. Relays were used as buffers between the touch-sensitive panel and the field equipment for convenience. Solid state devices such as SCRs' could also have been installed.

The remote selector switches can be used as alternatives for end of runway clearance when that runway is activated. The primary and secondary switches have identical circuitry. An 8 line to 3 line octal priority encoder is used to input the signal from the switches. These signals are latched by hex D-type flip flops and fed to a 3 to 8 line decoder/multiplexer. Here the signal is picked off and inverted before being sent to lamp drivers (SN75468) that light the

individual switch indicators. The 3 to 8 line decoder/multiplexer also sends their information to twelve positive 2-input NOR gates. From the NOR gates, the primary and secondary signals are combined into one set of six positive 2-input OR gates. The OR gates feed drivers (SN75468) that lead to the input side of the regular takeoff position switches on the runway ends. When a runway is properly activated, the takeoff signal can be initiated from either the panel or a remote switch assembly.

Touch-Sensitive Switches

There are 308 touch-sensitive switches available on the standard "C-panel" (by Centralab) used under the graphic overlay. Centers are .75" apart on an 11" X 17" area. A circuit contact is screen printed on one side of a flexible polyester sheet with similar contacts placed on a sturdy circuit board. These two are separated by a thin spacer with holes for each switch that provide an .007" air gap. Plated through holes bring the contacts to the underside of the panel assembly for external connection. The switches that are wired is determined by the requirements of the graphic overlay. Switches are rated for 60 meg cycles without failure. In the event of a switch failure, a near one could be wired for use and the graphic overlay modified with a sticker.

Interfacing into Existing Equipment

The mechanical switches and contacts that were used in the matrix and mimic panels employed analog voltage levels and signals. These were used in communication with the relay timers and relay circuitry on the fourth floor of the Bradley Tower. Extensive interfacing was required when connecting the digitally controlled touch-sensitive panel to the existing system.

The key to this interfacing problem was the SN75468 - Darlington transistor arrays. These high-voltage, high-current arrays were used before as lamp drivers for the panel lights. Here they act as logic buffers between the TTL and relay circuitry. The SN75468 was used to energize the coils of mini-dip relays. These relays than activated the timer relays necessary for the flashing of the light clusters. At the same time, another Darlington transistor pair enabled a relay to start the timing and flashing sequence of the light clusters out on the field. All this was initiated through the logic circuitry upon activation of a takeoff position switch.

During the installation of the touch-sensitive panel, many relays had to be replaced. This panel did not have any internal timing circuitry since it used the existing time delay relays at Bradley Tower. A digital timing sequence could easily have been employed if needed. This would have reduced the extensive rewiring of the relay circuitry. A great deal of the override usage was because the relays had failed to operate correctly.

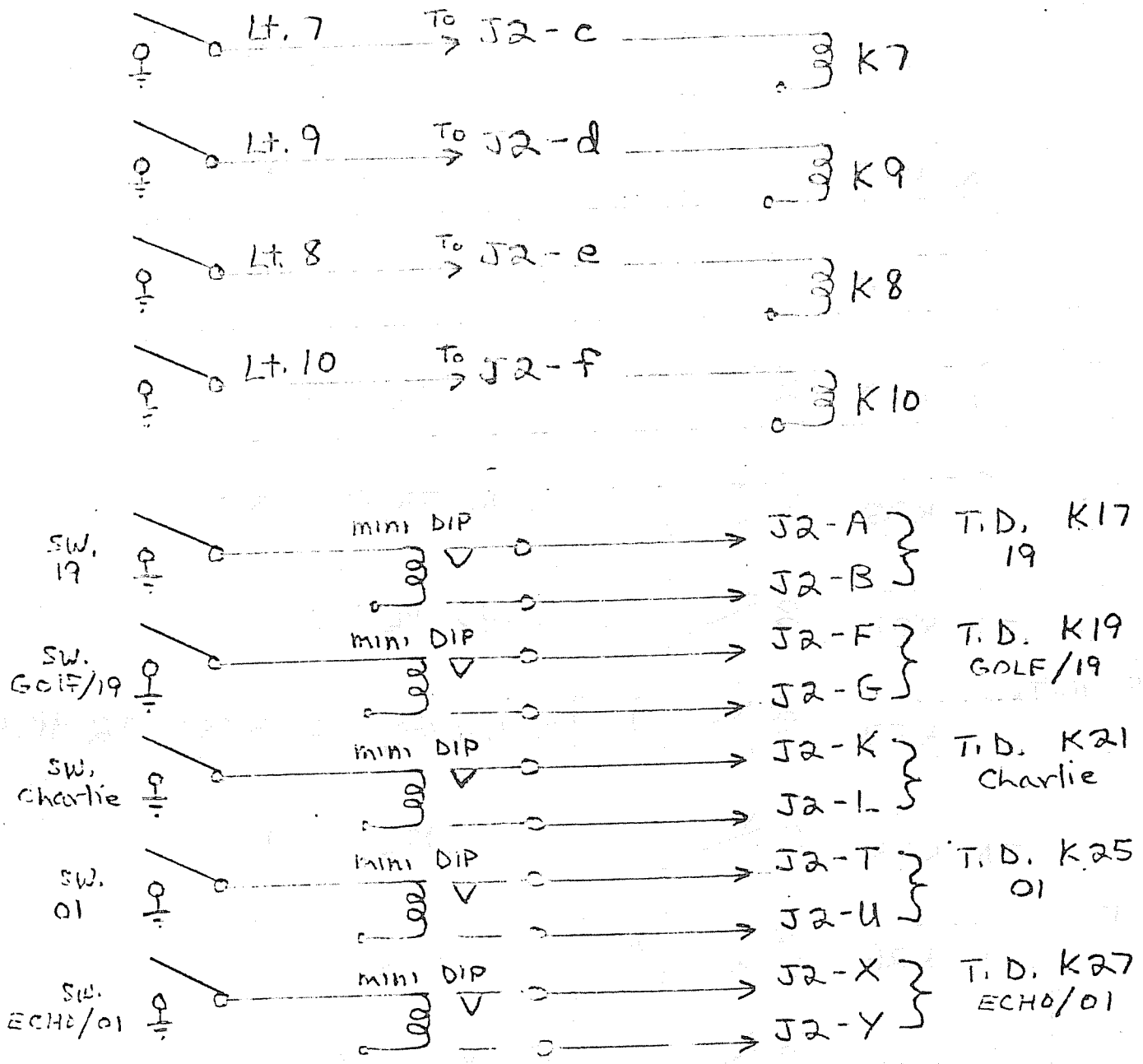
Lt. 7
To J2-c
K7
Lt. 9
To J2-d
K9
Lt. 8
To J2-e
K8
Lt. 10
To J2-f
K10
SW. 19
mini DIP
J2-A
J2-B
T.D. K17 19
SW. GOLF/19
mini DIP
J2-F
J2-G
T.D. K19 GOLF/19
SW. Charlie
mini DIP
J2-K
J2-L
T.D. K21 Charlie
SW. 01
mini DIP
J2-T
J2-U
T.D. K25 01
SW. ECHO/01
mini DIP
J2-X
J2-Y
T.D. K27 ECHO/01

RUNWAY 01-19

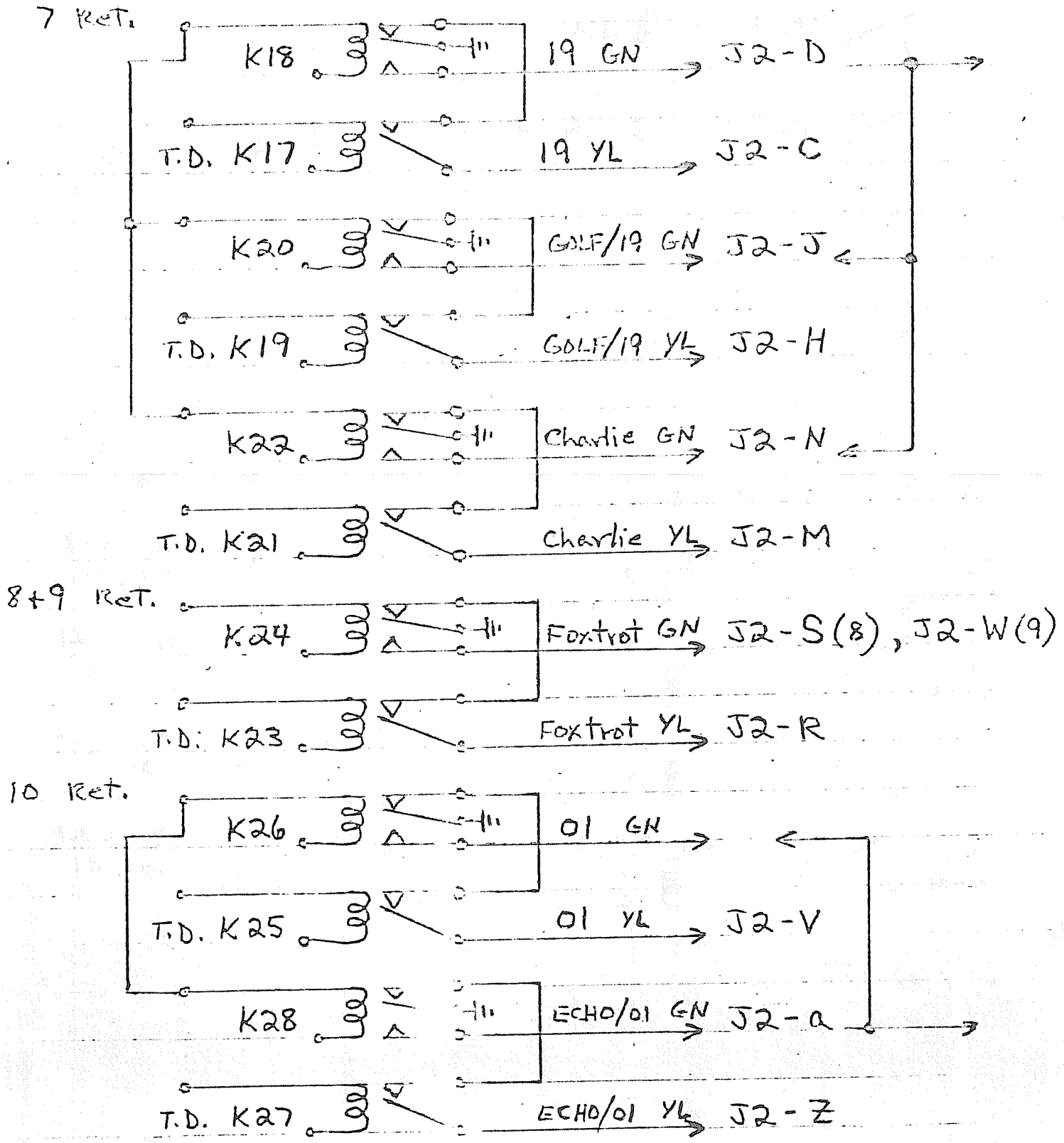
7 Ret.
K18
19 GN
J2-D
T.D. K17
19 YL
J2-C
K20
GOLF/19 GN
J2-J
T.D. K19
GOLF/19 YL
J2-H
K22
Charlie GN
J2-N
T.D. K21
Charlie YL
J2-M
8+9 Ret.
K24
Foxtrot GN
J2-S(8), J2-W(9)
T.D. K23
Foxtrot YL
J2-R
10 Ret.
K26
01 GN
T.D. K25
01 YL
J2-V
K28
ECHO/01 GN
J2-a
T.D. K27
ECHO/01 YL
J2-Z

RUNWAY 1 & 19

A - GND		1 - 19	8-U5
B - ACT 1	1-U10	2-19 arrow	14-U14
C - ACT 1 Lt.	16-U14	3 - yel Lt. (19)	11-U15
D - ACT 19	9-U10	4 - G/19	2-U6
E - ACT 19 Lt.	15-U14	5 - G/19	13-U14
F - 1	5-U4	6 - C/19	5-U6
H - 1 arrow	16-U13	7 - C/19 line arrow	12-U14
J - 1 yel	15-U13	8 - C/19 line arrow	11-U14
K - 10 out	14-U13	9 - 7 out	13-U15
L - reset 1	1-U2	10 - 1/33 line to 15-33	1-U13
M - E/1	8-U4	11 - reset 19	14-U2
N - E/1	13-U13	12 - reset G/19	1-U3
P - reset E/1	5-U2	13 - reset C/19	5-U3
R - F	11-U4	14 - S24	6-U17
S - F line	11-U13	15 - S24 Lt.	15-U20
T - F arrow	16-U15	16 - S19	5-U17
U - 8 out	12-U13	17 - S19 Lt.	14-U20
V - reset F	10-U2	18 - S15	4-U17
W - F arrow	14-U15	19 - S15 Lt.	13-U20
X - 9 out	15-U15	20 - yel Lt. (F)	10-U15
Y - yel Lt. (F)	12-U15	21 -	
Z - +5v		22 - +14v com.	9-U13-15

REMOTE SELECTOR

J1	BK	P	OFF	9-U17	J16	BK	S33 Lt.	16-U20
J2	RD	P	33	10-U17	J15	GN	S33	7-U17
J3	BK	P	33	16-U19	J14	BK	S OFF	8-U17
J4	OR	P	24	11-U17	J13	YL	P 1 Lt.	11-U19
J5	BK	P	24	15-U19	J12	BK	P 1	15-U17
J6	YL	P	19	12-U17	J11	BN	P 6 Lt.	12-U19
J7	BK	P	19 Lt.	14-U19	J10	BK	P 6	14-U17
J8	OR	P	15	13-U17	J9	RD	P 15 Lt.	13-U19

K1	BK	S6		3-U17	K14	BK	12-U28	to 5-U11 (6+24;F)
K2	RD	S6	Lt.	12-U20	K13	GN	13-U28	to 5-U12 (15+33;F)
K3	BK	S1		2-U17	K12	BK	15-U28	to 8-U11 (6+24;M)
K4	OR	S1	Lt.	11-U20	K11	YL	16-U28	to 8-U12 (15+33;M)
K5					K10			
K6					K9			
K7	Sec Gnd			5-U33	K8	Pri Gnd		2-U33

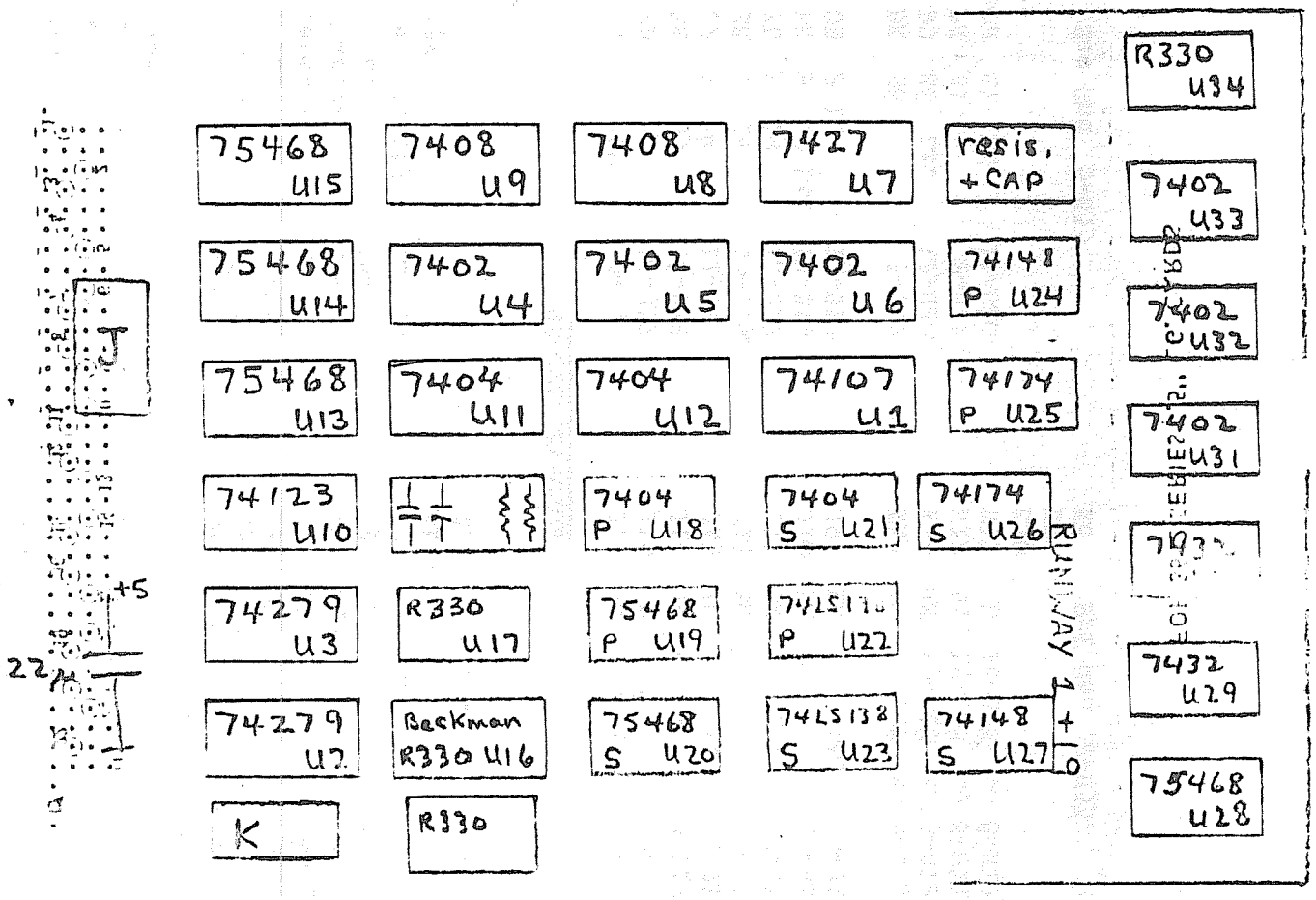

75468 U15
7408 U9
7408 U8
7427 U7
resis. + CAP
R330 U34
7402 U33
75468 U14
7402 U4
7402 U5
7402 U6
74148 P U24
7402 U32
75468 U13
7404 U11
7404 U12
74107 U1
74174 P U25
7402 U31
74123 U10
7404 P U18
7404 S U21
74174 S U26
74279 U3
R330 U17
75468 P U19
74LS138 P U22
7432 U29
74279 U2
Beckman R330 U16
75468 S U20
74LS138 S U23
74148 S U27
75468 U28
K
R330
J
+5
22
RUNWAY 1+10

RUNWAY 1+19

RUNWAY 06 - 24

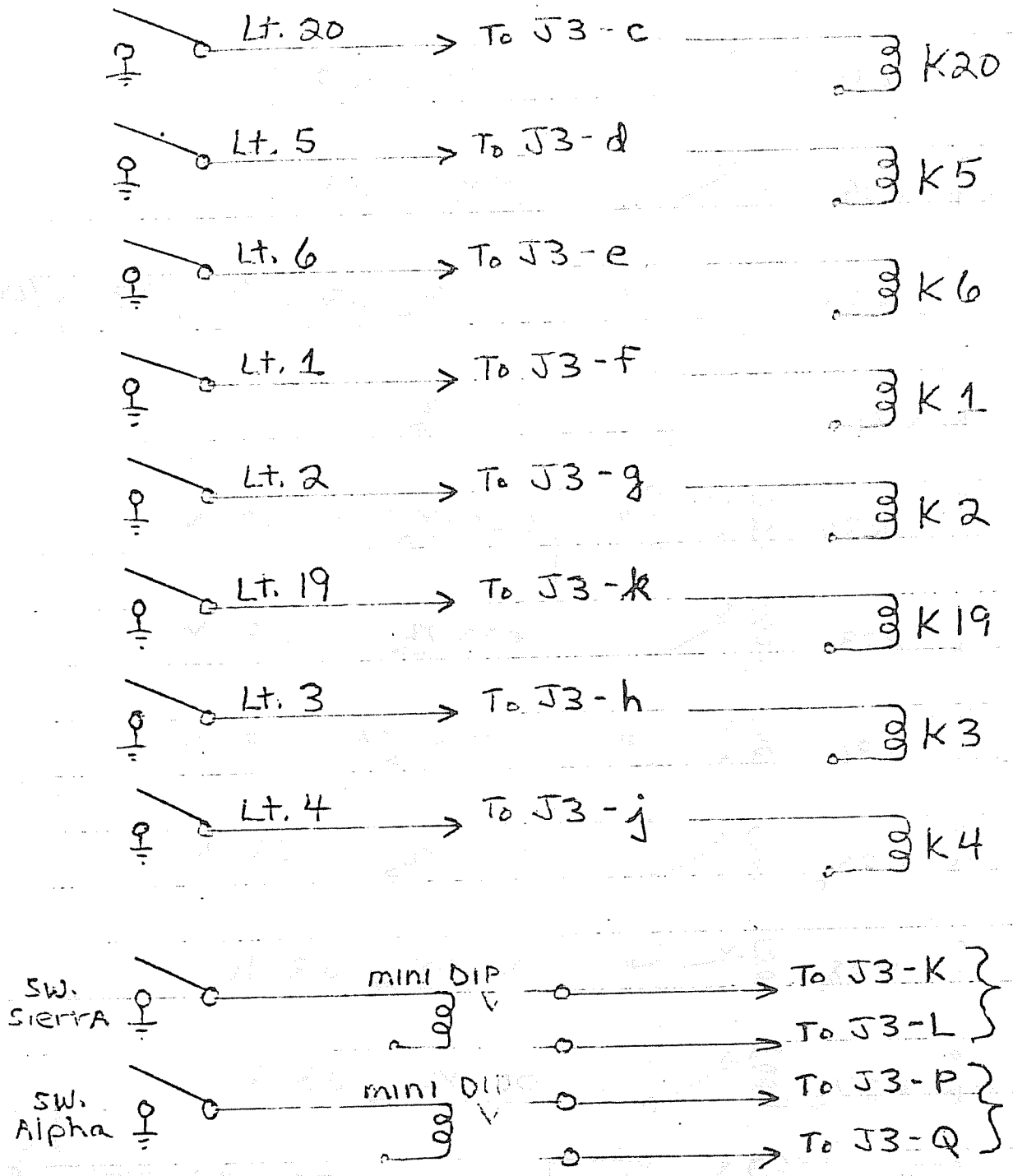
Lt. 20
To J3 - c
K20
Lt. 5
To J3 - d
K5
Lt. 6
To J3 - e
K6
Lt. 1
To J3 - f
K1
Lt. 2
To J3 - g
K2
Lt. 19
To J3 - k
K19
Lt. 3
To J3 - h
K3
Lt. 4
To J3 - j
K4
SW. Sierra
mini DIP
To J3 - K
To J3 - L
T. D. K33 Sierra
SW. Alpha
mini DIP
To J3 - P
To J3 - Q
T. D. K35 Alpha

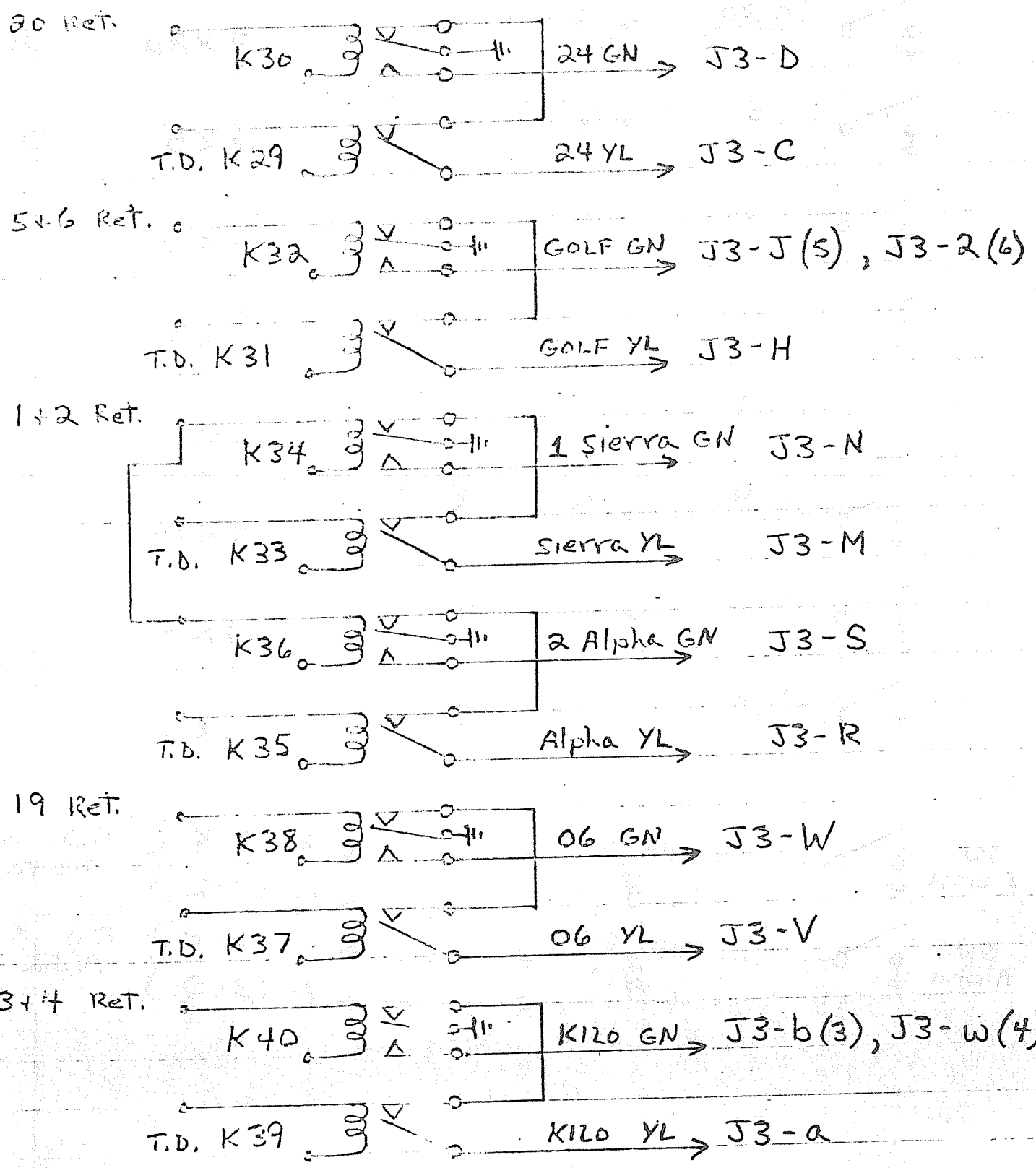
20 Ret.
K30
24 GN
J3-D
T.D. K29
24 YL
J3-C
5+6 Ret.
K32
GOLF GN
J3-J(5), J3-2(6)
T.D. K31
GOLF YL
J3-H
1+2 Ret.
K34
1 Sierra GN
J3-N
T.D. K33
Sierra YL
J3-M
K36
2 Alpha GN
J3-S
T.D. K35
Alpha YL
J3-R
19 Ret.
K38
06 GN
J3-W
T.D. K37
06 YL
J3-V
3+4 Ret.
K40
KILO GN
J3-b(3), J3-w(4)
T.D. K39
KILO YL
J3-a

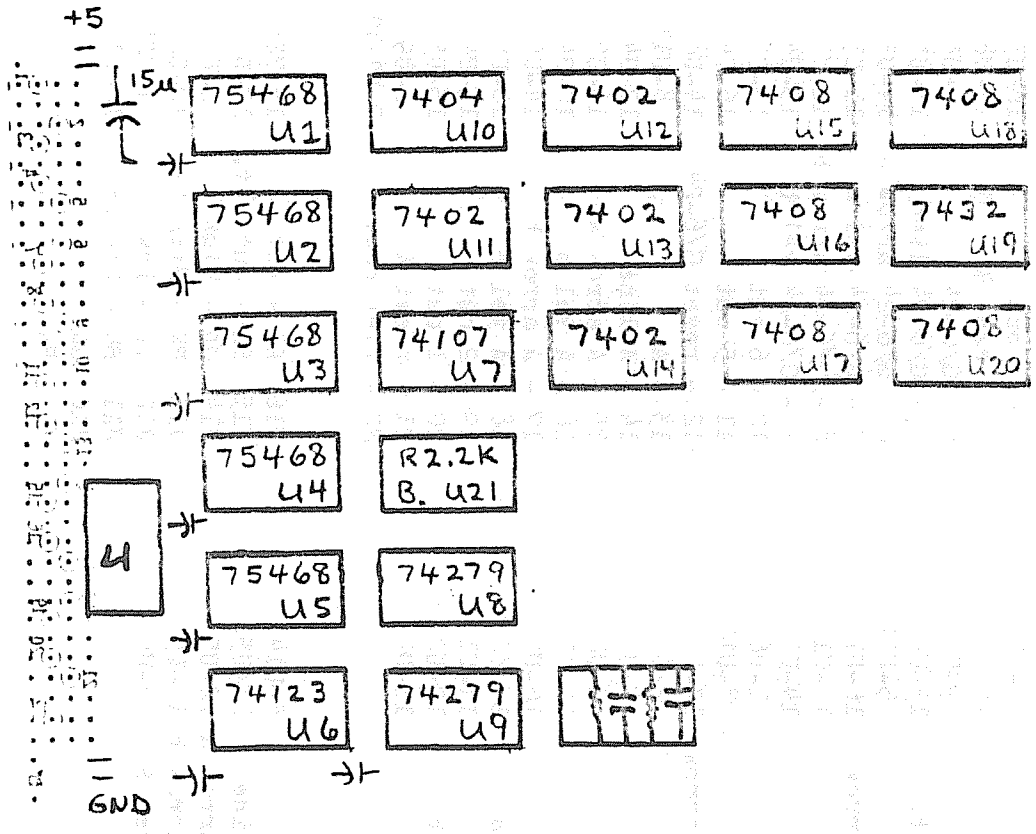
+5
15μ
75468 U1
7404 U10
7402 U12
7408 U15
7408 U18
75468 U2
7402 U11
7402 U13
7408 U16
7432 U19
75468 U3
74107 U7
7402 U14
7408 U17
7408 U20
75468 U4
R2.2K B. U21
75468 U5
74279 U8
74123 U6
74279 U9
4
GND

RUNWAY 6+24

RUNWAY 6 & 24

A - +5v			1 - 4 out	13-U2
B - ACT 6	1 - U6		2 - 3 out	16-U3
C - ACT 6 Lt.	14-U4		3 - reset K	10-U8
D - ACT 24	9-U6		4 - G/6-24	8-U12
E - ACT 24 Lt.	13-U4		5 - G/6-24 line	15-U3
F - 6	5-U11		6 - G/6-24 arrow a	14-U3
H - 6 line arrow	16-U1		7 - G/6-24 yel a	11-U3
J - 6 yel	15-U1		8 - G/6-24 arrow b	12-U3
K - 19 out	14-U1		9 - G/6-24 yel b	15-U4
L - reset 6	1-U8		10 - 6 out	13-U3
M - 24	8-U11		11 - 5 out	16-U4
N - 24 line arrow	13-U1		12 - reset G/6-24	14-U8
P - 24 yel	12-U1		13 - A	8-U13
R - 20 out	14-U2		14 - A line	12-U4
S - reset 24	5-U8		15 - A arrow a	16-U5
T - K	11-U11		16 - A yel a	10-U4
U - K line	16-U2		17 - A arrow b	14-U5
V - K arrow a	15-U2		18 - A yel B	10-U5
W - K yel a	11-U1		19 - 2 out	11-U4
X - K arrow b	12-U2		20 - 1 out	15-U5
Y - K yel b	11-U2		21 - reset A	1-U9
Z - GND			22 - +14v com.	9-U1-U5

J1	BR - S	5-U14	J16	RD - Auto	13-U25
J2	BK - S line	13-U5	J15	BK - Auto Lt.	10-U1
J3	WT - S Arrow a	12-U5	J14	OR - High	2-U25
J4	BK - S arrow b	11-U5	J13	BK - High Lt.	10-U2
J5	OR - reset S	5-U9	J12	YL - Low	1-U25
J6	BK		J11	BK - Low Lt.	10-U3
J7	RD		J10	GN	
J8	BK		J9	BK	

RUNWAY 15 33

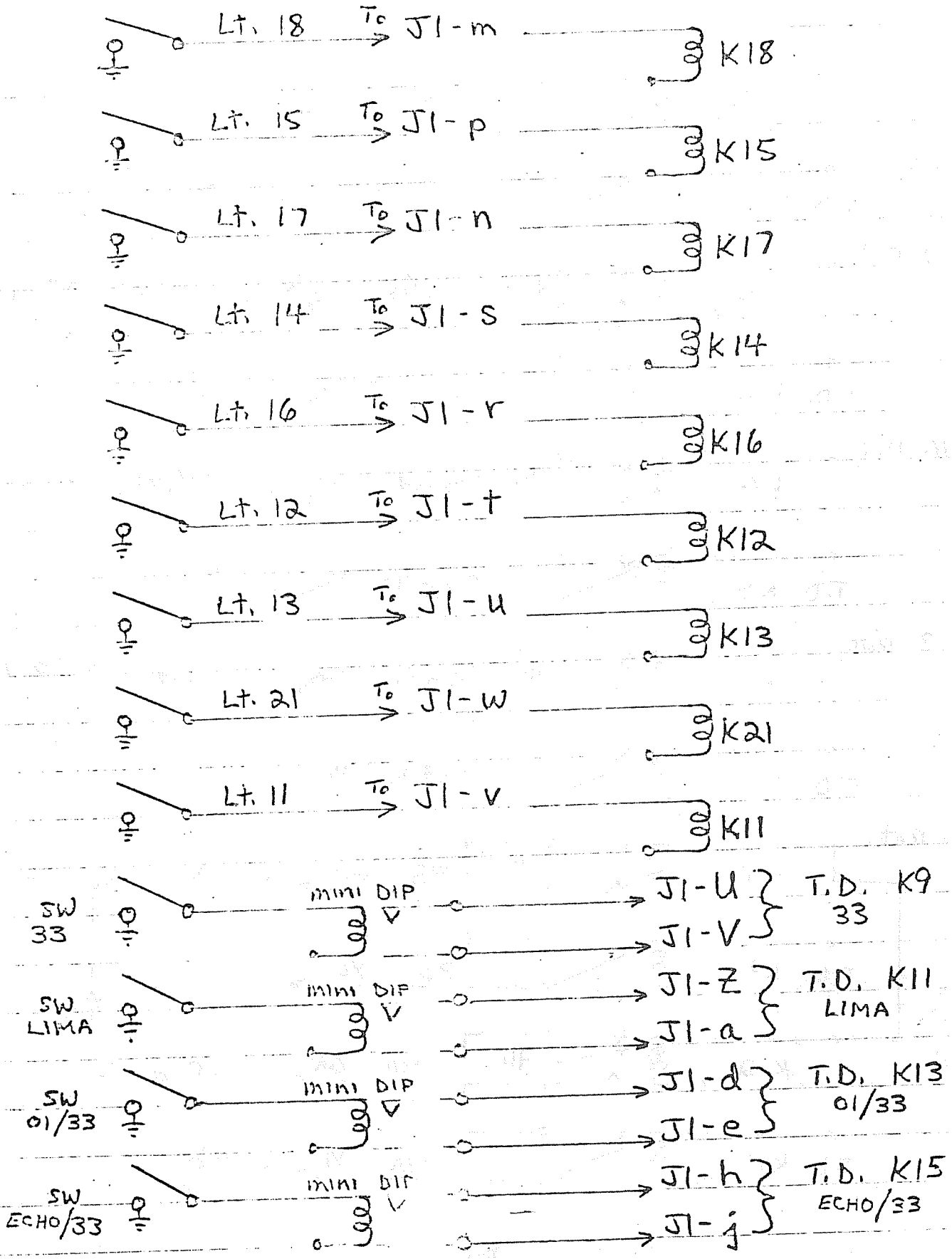
Lt. 18 To J1-m K18
Lt. 15 To J1-p K15
Lt. 17 To J1-n K17
Lt. 14 To J1-s K14
Lt. 16 To J1-r K16
Lt. 12 To J1-t K12
Lt. 13 To J1-u K13
Lt. 21 To J1-w K21
Lt. 11 To J1-v K11
SW 33
mini DIP
J1-U
J1-V
T.D. K9 33
SW LIMA
mini DIP
J1-Z
J1-a
T.D. K11 LIMA
SW 01/33
mini DIP
J1-d
J1-e
T.D. K13 01/33
SW ECHO/33
mini DIP
J1-h
J1-j
T.D. K15 ECHO/33

RUNWAY 15-33

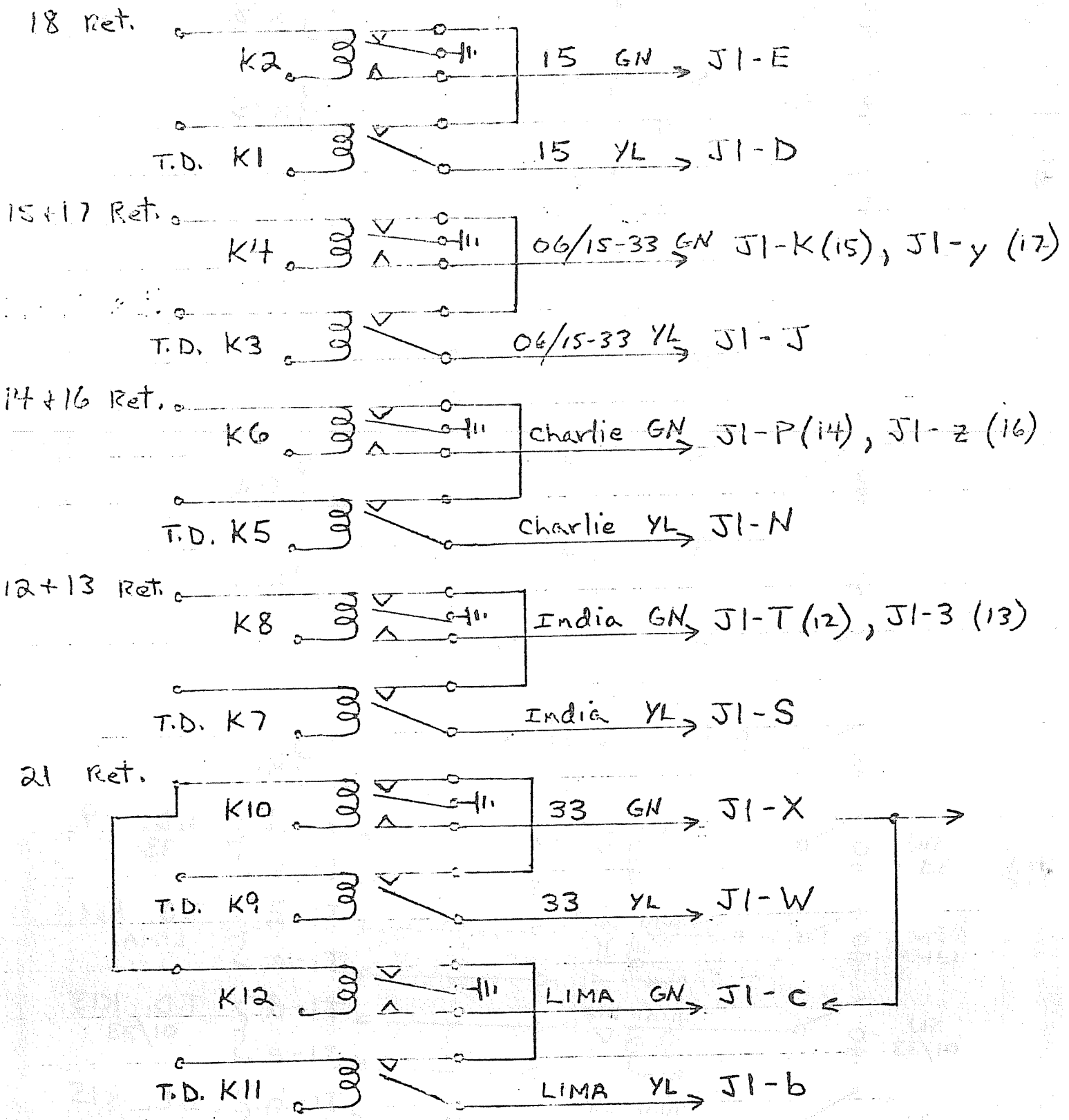
18 Ret.
K2
15 GN
J1-E
T.D. K1
15 YL
J1-D
15+17 Ret.
K4
06/15-33 GN
J1-K(15), J1-y (17)
T.D. K3
06/15-33 YL
J1-J
14+16 Ret.
K6
Charlie GN
J1-P(14), J1-z (16)
T.D. K5
Charlie YL
J1-N
12+13 Ret.
K8
India GN
J1-T(12), J1-3 (13)
T.D. K7
India YL
J1-S
21 Ret.
K10
33 GN
J1-X
T.D. K9
33 YL
J1-W
K12
LIMA GN
J1-c
T.D. K11
LIMA YL
J1-b

RUNWAY 15-33 con't

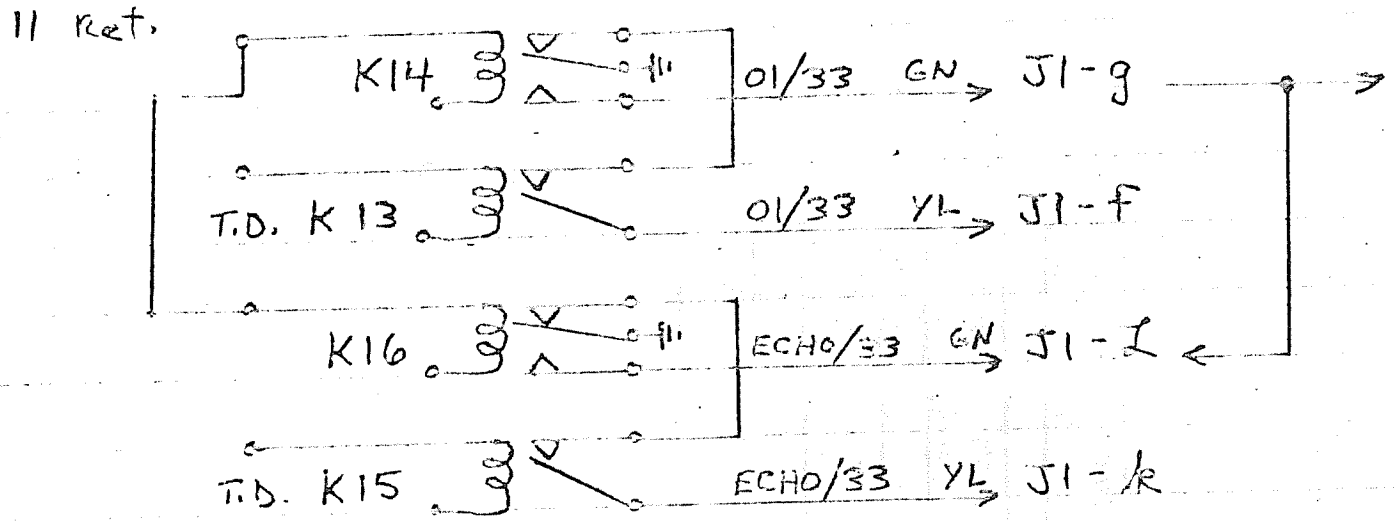

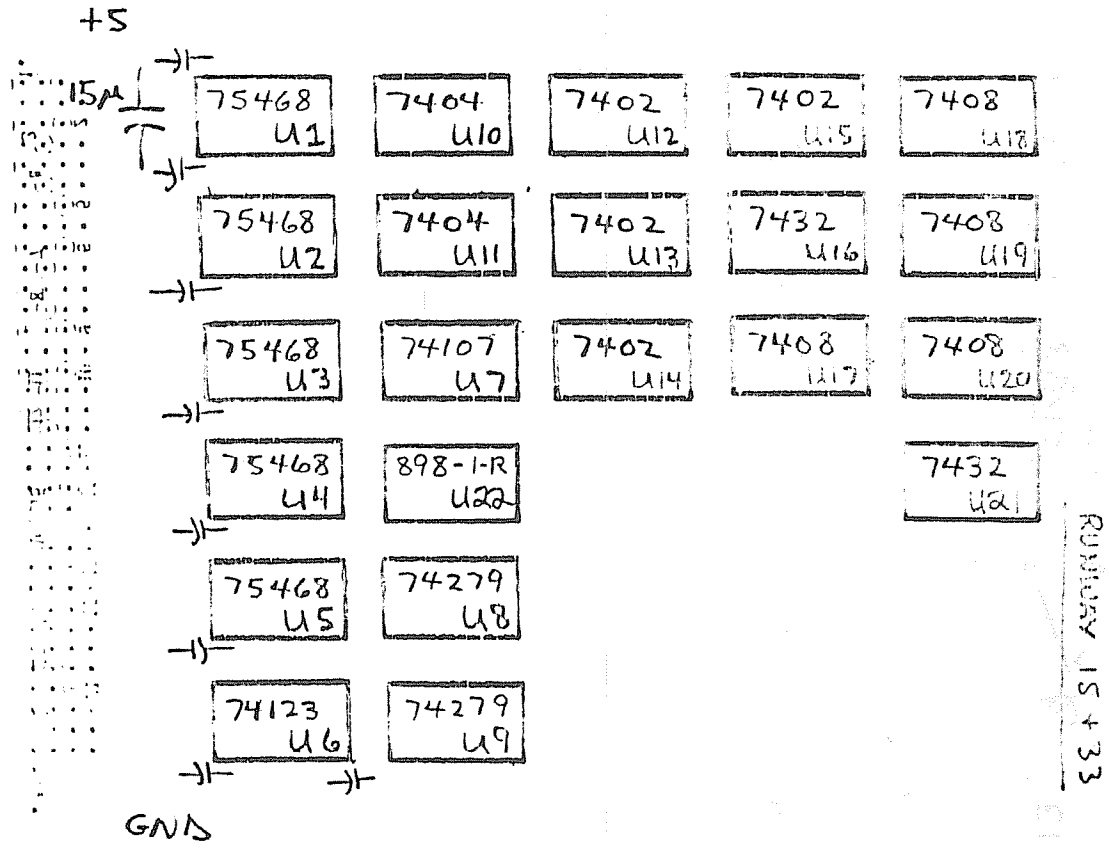
+5
.15μ
75468 U1
7404 U10
7402 U12
7402 U15
7408 U18
75468 U2
7404 U11
7402 U13
7432 U16
7408 U19
75468 U3
74107 U7
7402 U14
7408 U17
7408 U20
75468 U4
898-1-R U22
7432 U21
75468 U5
74279 U8
74123 U6
74279 U9
GND

RUNWAY 15 + 33

Interface wire change of relay circuitry

RUNWAY 01-19

TB-10-8 → TB-3-18 (lift K24-5) → J2-S

TB-10-9 → TB-3-23 (lift K26-5) → J2-W

TB-10-10 → Same (jumper TB-3-24 to TB-3-28) → J2-a

(jumper TB-3-4,10,14) → J2-b

RUNWAY 06-24

TB-10-5 → TB-5-10 (lift K32-5) → J3-J

TB-10-6 → TB-6-25 → J3-2

TB-10-1 → TB-5-15 (lift K34-5) → J3-N

TB-10-2 → TB-5-20 (lift K36-5) → J3-S

TB-10-3 → TB-6-2 (lift K40-5) → J3-b

TB-10-4 → TB-6-21 → J3-w

RUNWAY 15-33

TB-10-15 → TB-1-11 (lift K4-5) → J1-K

TB-10-17 → TB-2-24 → J1-y

TB-10-14 → TB-1-16 (lift K6-5) → J1-P

TB-10-16 → TB-2-25 → J1-z

TB-10-12 → TB-1-21 (lift K8-5) → J1-T

TB-10-13 → TB-2-27 → J1-3

TB-1-26 → TB-2-[illegible] (jumper J1-X to J1-c) → J1-X

TB-2-8 → TB-2-[illegible] (jumper J1-g to J1-L) → J1-g

mini relay control wiring

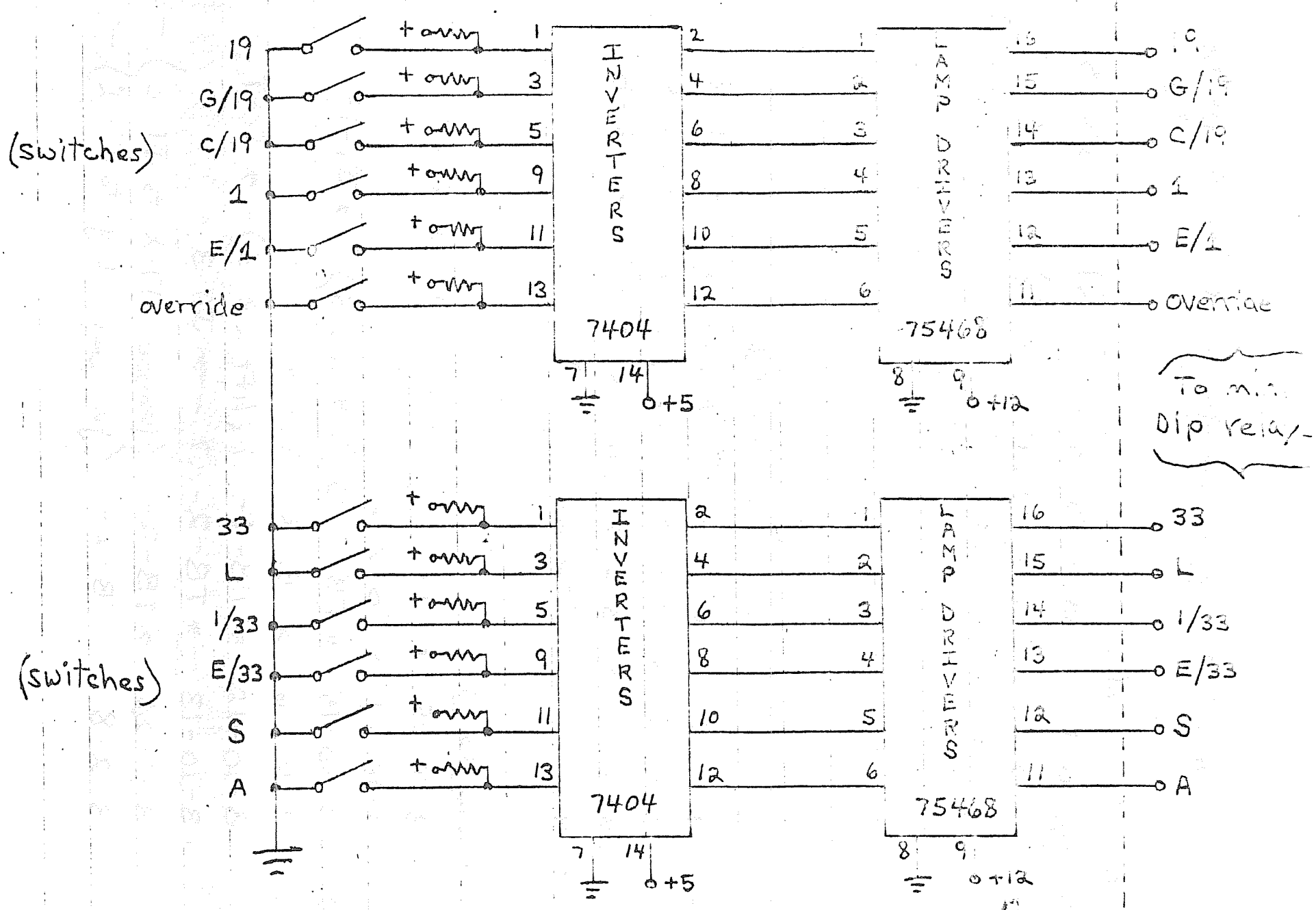

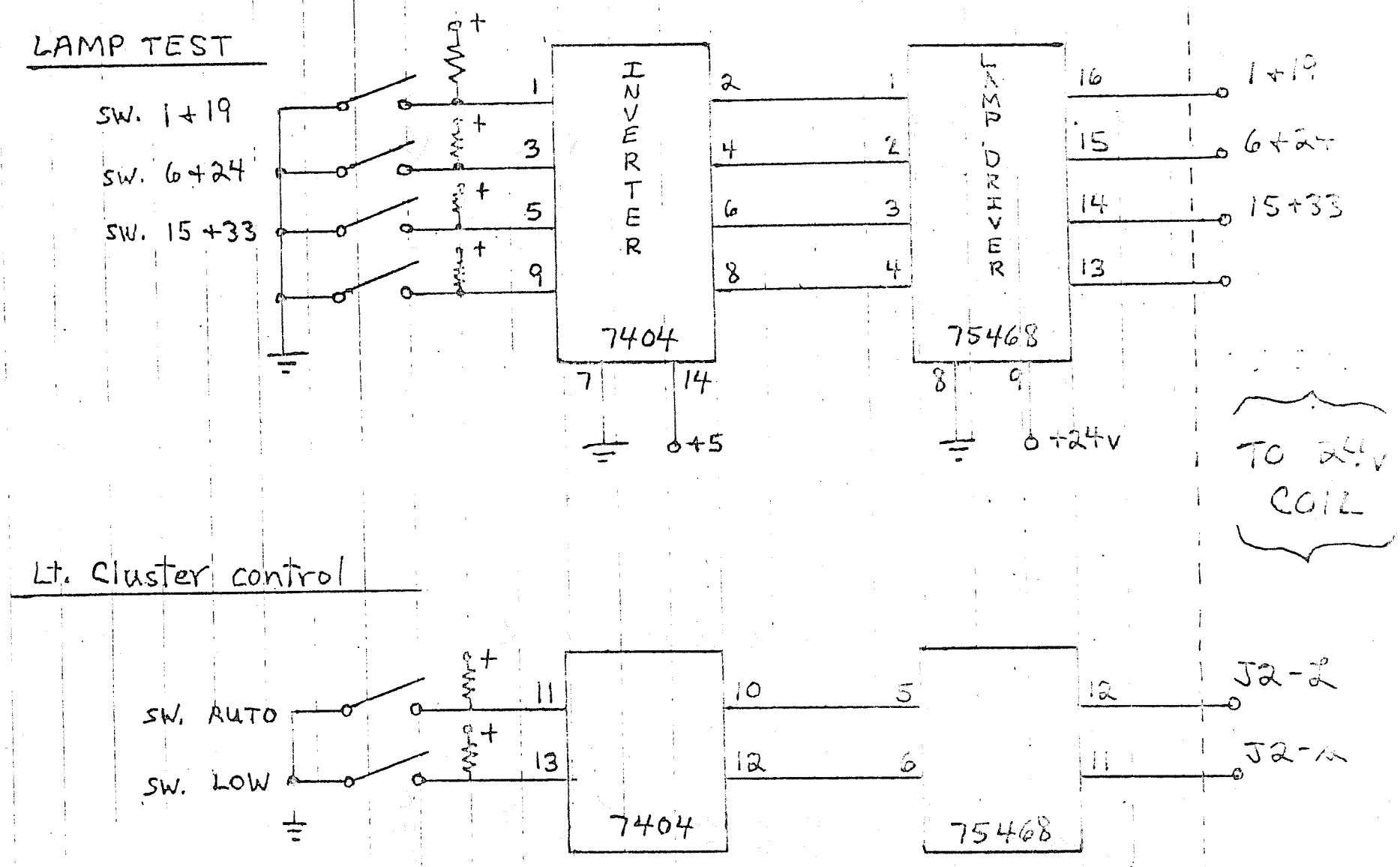
LAMP TEST
SW. 1+19
SW. 6+24
SW. 15+33
INVERTER
7404
LAMP DRIVER
75468
+5
+24V
1+19
6+24
15+33
TO 24V COIL
Lt. Cluster control
SW. AUTO
SW. LOW
7404
75468
J2-2
J2-A

Integrated Circuits Parts List

IC	RUNWAY 01+19	RUNWAY 6+24	RUNWAY 15+33
7402	6	4	4
7404	4	2	2
7408	2	5	4
74S10	—	1	—
7427	1	—	—
7432	2	1	2
74107	1	1	1
74123	1	1	1
74138	2	—	—
74148	2	—	—
74174	2	—	—
74278	—	1	—
74279	2	2	2
75468	6	5	5
R330	4	2	2

RUNWAY 15 & 33

A - ACT 15	4-U22	1 - 12 out	13-U2
B - +5V		2 - reset I	14-U8
C - ACT 15 Lt.	14-U4	3 - I yel a	11-U2
D - ACT 33	14-U22	4 - I arrow b	12-U3
E - ACT 33 Lt.	13-U4	5 - I yel b	11-U1
F - 15	5 -U12	6 - 13 out	16-U3
H - 15 line arrow	16-U1	7 - C/15-33	8-U13
J - 15 yel	15-U1	8 - C/15-33 line	15-U3
K - 18 out	14-U1	9 - C/15-33 arrow a	14-U3
L - reset 15	1-U8	10 - C/15-33 yel a	11-U3
M - 33	8-U12	11 - C/15-33 arrow b	12-U4
N - 33 line arrow	13-U1	12 - C/15-33 yel b	15-U4
P - 33 yel	12-U1	13 - 16 out	13-U3
R - 21 out	14-U2	14 - 14 out	16-U4
S - reset 33	5-U8	15 - reset C/15-33	14-U9
T - L	11-U12	16 - E/33	2-U15
U - L line arrow	16-U2	17 - E/33 line arrow	11-U4
V - reset L	10-U8	18 - E/33 yel	10-U4
W - I	8-U14	19 - 11 out	10-U3
X - I line	12-U2	20 - reset E/33	1-U9
Y - I arrow a	15-U2	21 - from 1	13-U16
Z - Gnd		22 - +14V com.	9-U1-U5

J1 BK - 1/33	5-U15	J16 BK - 6/15-33	8-U15
J2 YL - 1/33 line arrow	16-U5	J15 BR - 6/15-33 line	14-U5
J3 BK - 1/33-1 line	15-U5	J14 BK - 6/15-33 arrow a	11-U5
J4 OR - reset 1/33	5-U9	J13 RD - 6/15-33 arrow b	10-U1
J5 BK - 17 out	10-U5	J12 BK - 6/15-33 yel a	13-U5
J6 GY - 15 out	10-U2	J11 GN - 6/15-33 yel b	12-U5
J7 BK		J10 BK - reset 6/15/33	10-U9
J8 VT		J9 BL	

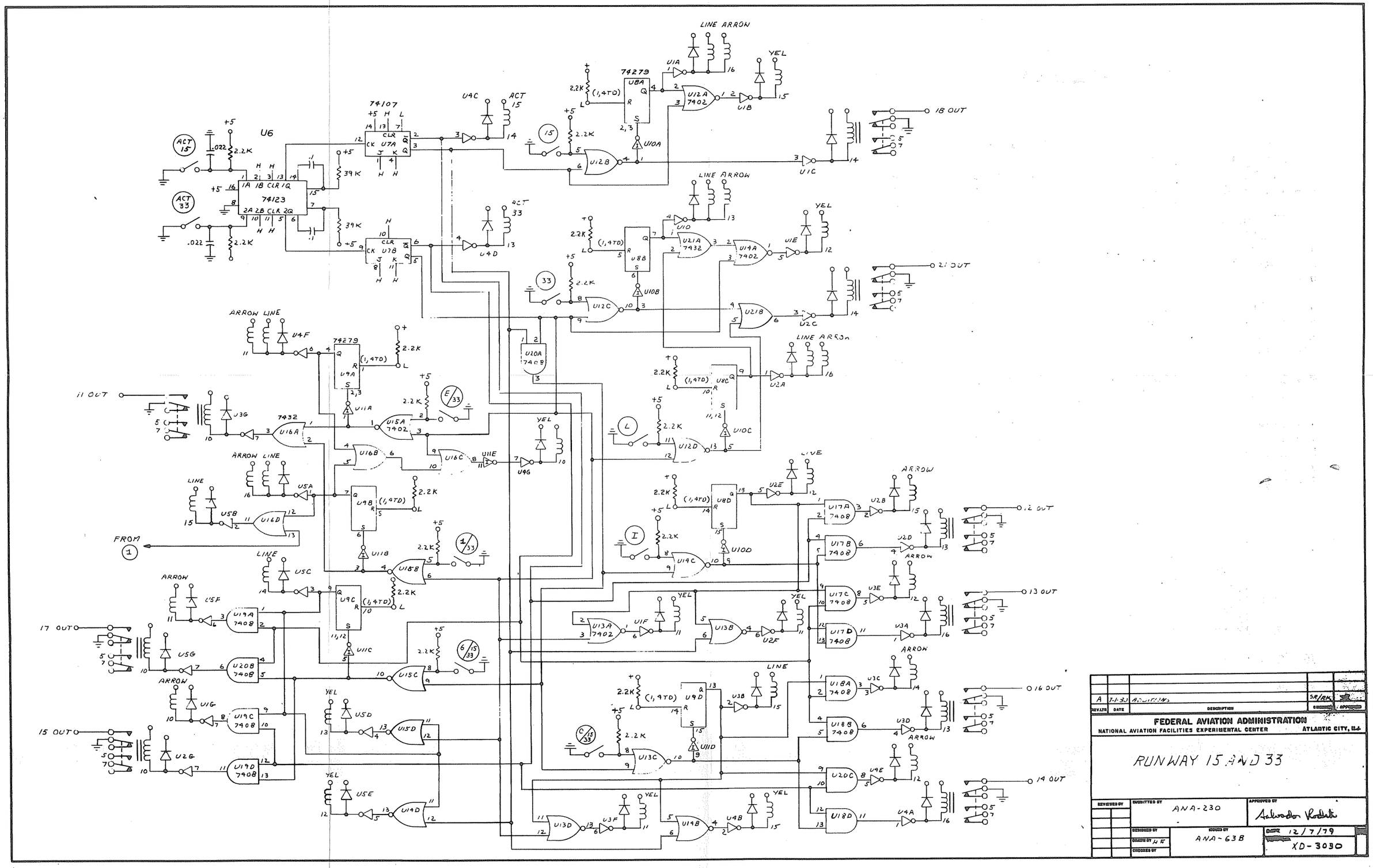
U6
74123
74107
74279
7432
7402
7408
LINE ARROW
ARROW LINE
YEL
ACT 15
ACT 33
18 OUT
21 OUT
11 OUT
17 OUT
15 OUT
12 OUT
13 OUT
16 OUT
14 OUT
FROM 1
FEDERAL AVIATION ADMINISTRATION
NATIONAL AVIATION FACILITIES EXPERIMENTAL CENTER
ATLANTIC CITY, N.J.
RUNWAY 15 AND 33
ANA-230
ANA-63B
12/7/79
XD-3030

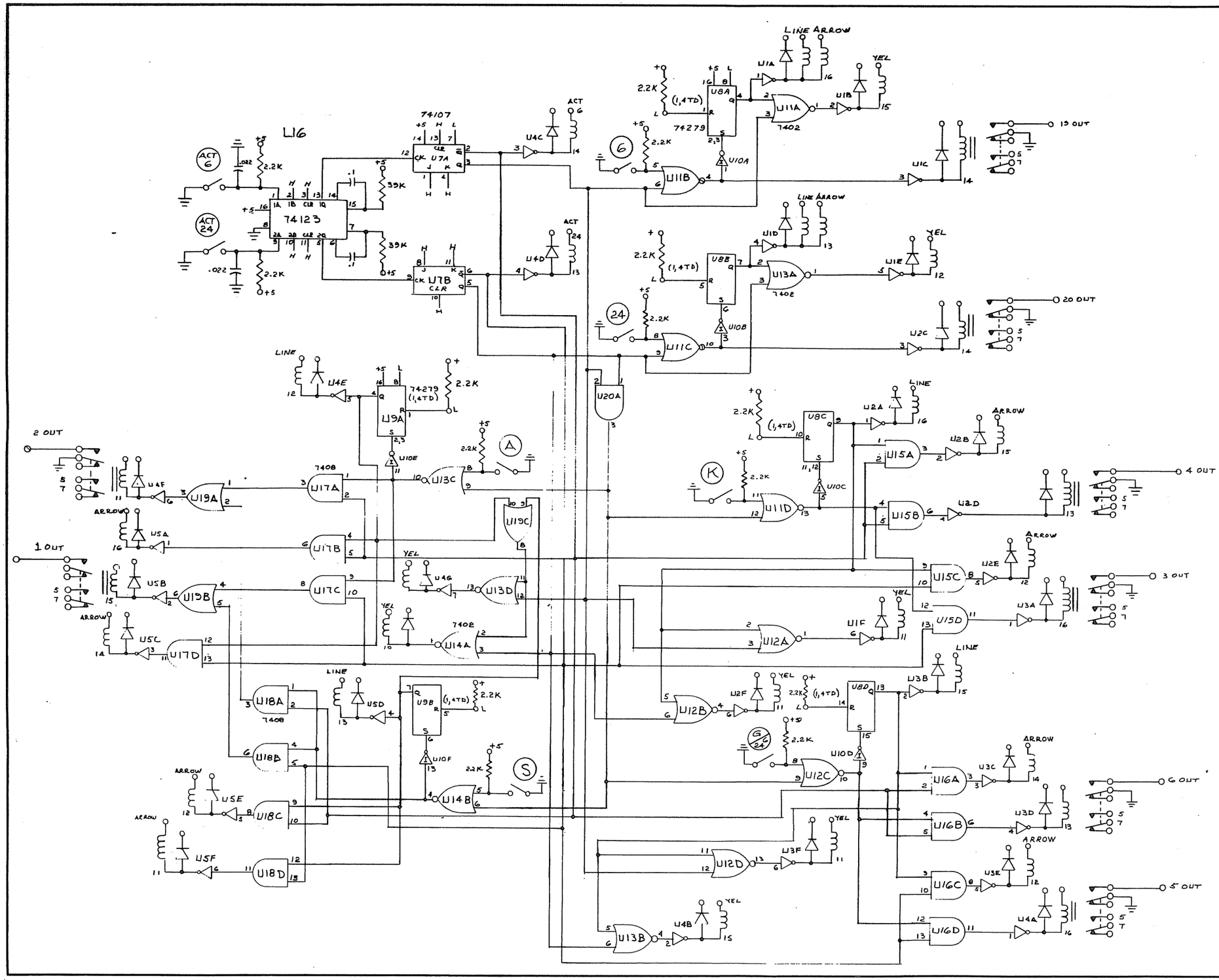

REV.LTR	DATE	DESCRIPTION	CHECKED	APPROVED
A	7-1-80	ADDITION	SR/RK	SR

FEDERAL AVIATION ADMINISTRATION

NATIONAL AVIATION FACILITIES EXPERIMENTAL CENTER — ATLANTIC CITY, N.J.

RUNWAY 6 AND 24

REVIEWED BY	SUBMITTED BY	APPROVED BY
	ANA-230	Salvador Rodriguez

DESIGNED BY	ISSUED BY	DATE
DRAWN BY HJL	ANA-63B	12-12-79
CHECKED BY		DRAWING NO. XD-3031

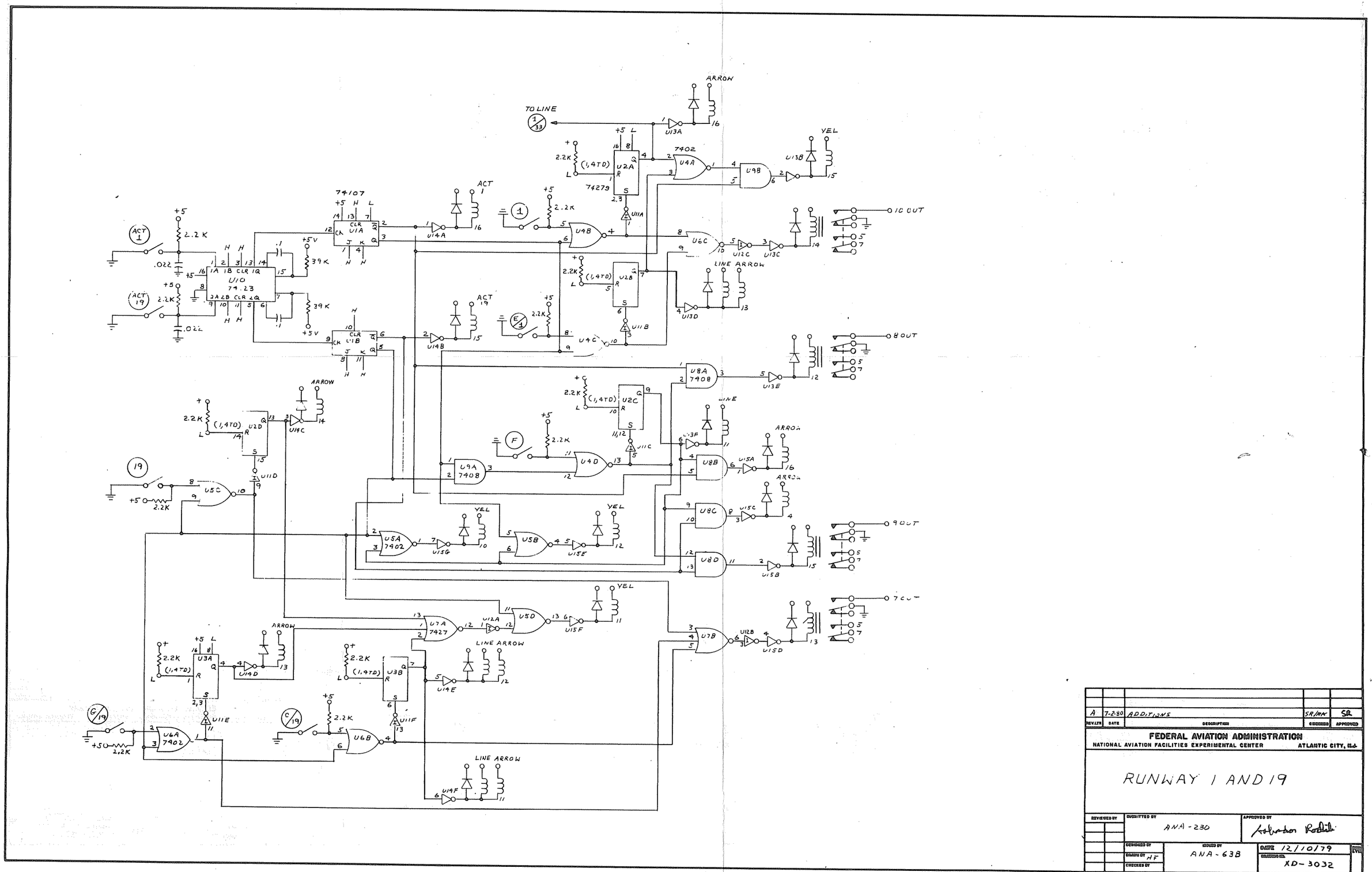

REV.LTR	DATE	DESCRIPTION	CHECKED	APPROVED
A	7-2-80	ADDITIONS	SR/RK	SR

FEDERAL AVIATION ADMINISTRATION
NATIONAL AVIATION FACILITIES EXPERIMENTAL CENTER — ATLANTIC CITY, N.J.

RUNWAY 1 AND 19

REVIEWED BY	SUBMITTED BY: ANA-230	APPROVED BY: Salvador Rodriguez
DESIGNED BY / DRAWN BY: HF / CHECKED BY	ISSUED BY: ANA-63B	DATE: 12/10/79
		DRAWING NO.: XD-3032

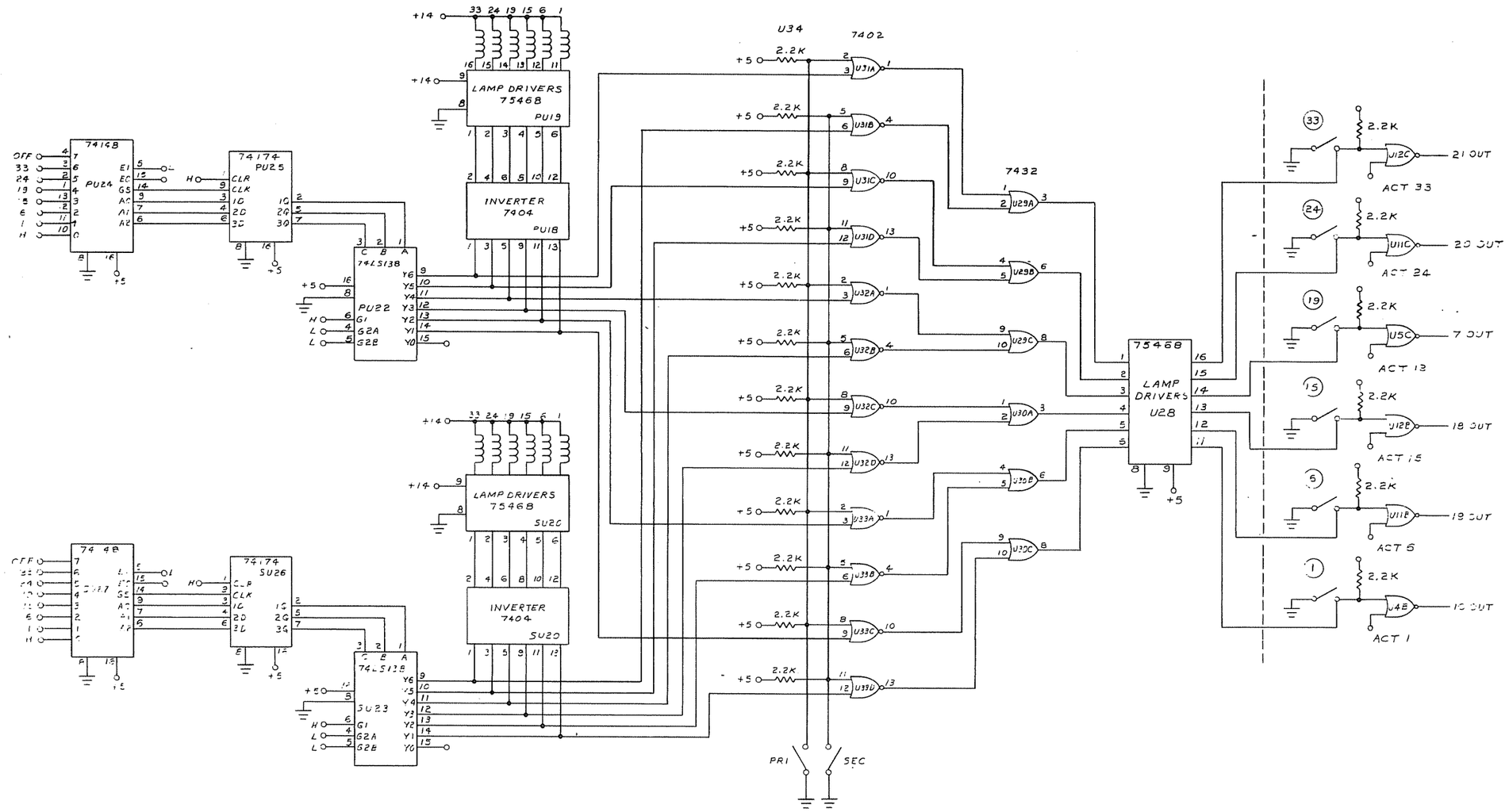

REV LTR	DATE	DESCRIPTION	CHECKED	APPROVED

FEDERAL AVIATION ADMINISTRATION

NATIONAL AVIATION FACILITIES EXPERIMENTAL CENTER — ATLANTIC CITY, N.J.

REMOTE CONTROL
(ON CARD 1 & 3)

REVIEWED BY	SUBMITTED BY	APPROVED BY
	ACT-230	[illegible]

DESIGNED BY	ISSUED BY	DATE 7-7-90
DRAWN BY	ACT-63C	DRAWING NO. XD-3072
CHECKED BY		REV. LTR.